SHEET INDEX

SHT No.	DWG No.	TITLE
1	G-1	TITLE SHEET
2	G-2	GENERAL NOTES
3	C-1	SURVEY CONTROL AND KEY SHEET
4	C-2	PLAN AND PROFILE
5	C-3	PLAN AND PROFILE
6	C-4	PLAN AND PROFILE
7	C-5	PLAN AND PROFILE
8	C-6	STANDARD DETAILS
9	C-7	CIVIL DETAILS
10	TC-1	TRAFFIC CONTROL PLAN
11	TC-2	TRAFFIC CONTROL PLAN
12	DP-1	DETOUR PLAN

GRIDLEY
CALIFORNIA

STATE ROUTE 99 - WATERLINE RELOCATION PROJECT

SHELDON AVE TO ARCHER AVE ALONG SR-99 IN
THE CITY OF GRIDLEY, COUNTY OF BUTTE
CITY PROJECT #24-01

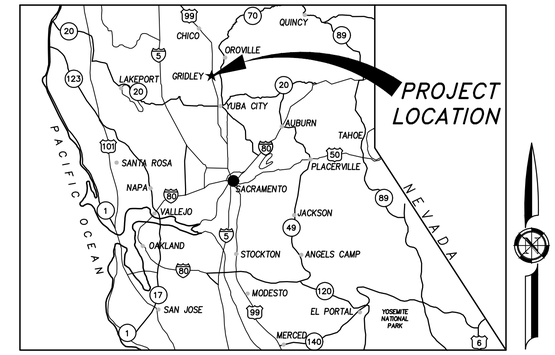

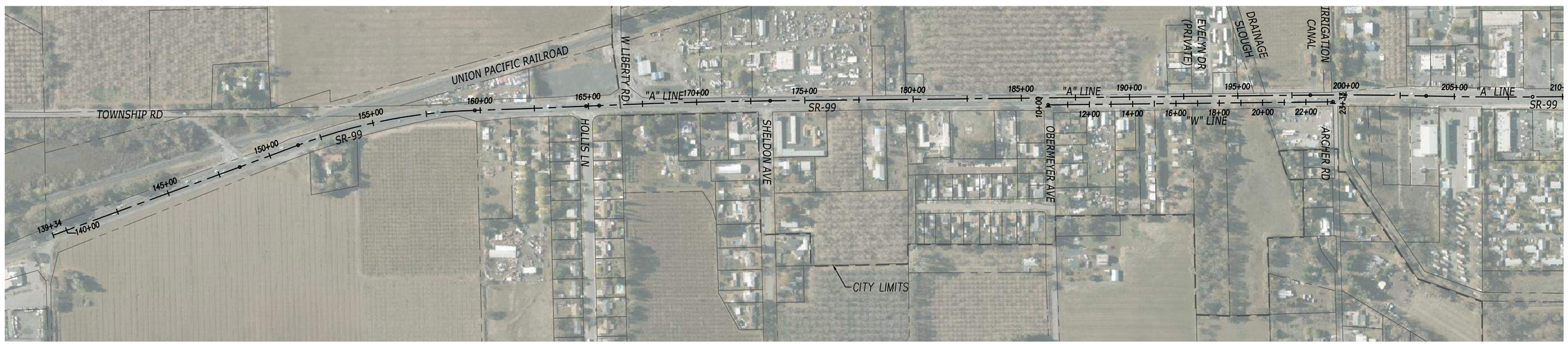

LOCATION MAP
SCALE: 1" = 250'

UTILITY REPRESENTATIVES			
UTILITY	COMPANY	CONTACT	PHONE
ELECTRICAL	BIGGS-GRIDLEY ELECTRIC	ROSS PIPPITT	(530) 846-5954
GAS/ELECTRICAL	PACIFIC GAS & ELECTRIC	TODD CASH	(530) 894-4781
SEWER	CITY OF GRIDLEY	ROSS PIPPITT	(530) 846-5954
TELEPHONE	AT&T	CORT SCHREIBER	(530) 891-2392
USA	NORTH UNDERGROUND SERVICE ALERT	STAFF	(800) 227-2600
WATER	CITY OF GRIDLEY	ROSS PIPPITT	(530) 846-5954
STORMWATER	RECLAMATION DISTRICT 2056	JEFF SPENCE	(530) 671-1008
WATER	BUTTE WATER DISTRICT	MARK ORME	(530) 682-8454
COMMUNICATIONS	LEVEL 3 COMMUNICATIONS	CALEB KING	(916) 457-0007
HIGHWAY	CALTRANS		

811 Know what's below. Call before you dig.

SUBMITTED BY:

BEN|EN
TRUSTED ENGINEERING ADVISORS

DAVE HARDEN, PE
GRIDLEY CONTRACT CITY ENGINEER
P.E. 84216

07/23/2024
DATE

APPROVED BY:

ROSS RIPPITT
PUBLIC UTILITY DIRECTOR
CITY OF GRIDLEY

NO.	REVISIONS	BY	DATE
6			
5			
4			
3			
2			
1			

BENCH MARK ELEV : 96.08 DATUM : NAVD88
DESCRIPTION :
BASIS OF ELEVATIONS: CM 2.97, 96.08'
BASIS OF BEARINGS: CCS, ZONE 2, NAD 83
(2011) EPOCH 2017.5

DESIGN BY :	A. HOLLADAY
DRAWN BY :	J. GINNEVER
CHECKED BY :	D. HARDEN
SCALE :	N/A
DATE :	07/23/2024
PROJ NO. :	16607-104

VERIFY SCALE
BAR IS ONE INCH ON ORIGINAL DRAWING.
0 1"
IF NOT ONE INCH ON THIS SHEET, ADJUST SCALES ACCORDINGLY.

REGISTERED PROFESSIONAL ENGINEER DAVID P. HARDEN C 84216 CIVIL STATE OF CALIFORNIA

BEN|EN
TRUSTED ENGINEERING ADVISORS

Bennett Engineering Services
1082 Sunrise Avenue, Suite 100
Roseville, CA 95661

(916) 783-4100
www.ben-en.com

GRIDLEY CALIFORNIA
CITY OF GRIDLEY

GRIDLEY SR-99 WATER RELOCATION PROJECT

TITLE SHEET

CALIFORNIA

G-1
1 OF 12

Login Name: jginnever
Plot Date: July 23, 2024 - 12:49 pm; Plot Style: ###
File Name: P:\Proj\16607-104-Gridley-SR99 Waterline\03-PLANS\MASTERS\SHEETS\16604-104_01 G-1 TITLE SHEET.dwg
XREFS: IDM-16607-104_H_22x34 | 16607-104_XR-SITE | 03_Int40_BUT 99-PM 2.45-5.40_Survey Data | 106-BASEMAP

GENERAL NOTES:

1. CONTRACTOR AGREES TO ASSUME SOLE AND COMPLETE RESPONSIBILITY FOR THE JOB SITE DURING THE COURSE OF CONSTRUCTION OF THIS PROJECT, INCLUDING SAFETY OF ALL PERSONS AND PROPERTY, THAT THIS REQUIREMENT SHALL APPLY CONTINUOUSLY AND NOT BE LIMITED TO NORMAL WORKING HOURS, AND THAT THE CONTRACTOR SHALL DEFEND, INDEMNIFY, AND HOLD THE CITY, BENNETT ENGINEERING SERVICES AND ITS REPRESENTATIVES HARMLESS FROM ANY AND ALL LIABILITY, REAL AND/OR ALLEGED, IN CONJUNCTION WITH THE PERFORMANCE OF THIS PROJECT.
2. CONTRACTOR SHALL BE HELD RESPONSIBLE FOR ANY AND ALL DAMAGES TO EXISTING STRUCTURES, ROADS, PRIVATE PROPERTY, AND UTILITIES DURING CONSTRUCTION.
10. ALL UTILITIES SHOWN ARE APPROXIMATE AND WERE TAKEN FROM AVAILABLE RECORD DRAWINGS. NOTIFY UNDERGROUND SERVICES ALERT PRIOR TO ANY GRADING OR EXCAVATION WITHIN THE SITE 1-800-642-2444.
11. A SET OF SIGNED WORKING DRAWINGS AND A SET OF SPECIFICATIONS SHALL BE KEPT AT ALL TIMES AT THE JOB SITE ON WHICH ALL CHANGES OR VARIATIONS IN THE WORK, INCLUDING ALL EXISTING UTILITIES, ARE TO BE RECORDED AND/OR CORRECTED DAILY AND SUBMITTED TO THE ENGINEER WHEN THE WORK TO BE DONE IS COMPLETED.
12. CONTRACTOR SHALL PROVIDE AND MAINTAIN SUFFICIENT TEMPORARY BARRIERS TO PROVIDE FOR THE SAFETY OF THE STAFF WORKERS AND PUBLIC TO THE SATISFACTION OF THE ENGINEER, THE CITY, AND CALTRANS.
13. ALL MATERIALS SHALL BE FURNISHED AND INSTALLED BY THE CONTRACTOR UNLESS NOTED OTHERWISE.
14. CONTRACTOR SHALL COOPERATE WITH ALL CITY STAFF, IF REQUIRED, TO FACILITATE MAKING AREAS READY FOR WORK.
15. CONTRACTOR SHALL NOTIFY THE CITY PUBLIC WORKS SUPERVISOR AT LEAST 72 HOURS IN ADVANCE OF COMMENCEMENT OF ANY PART OF THE WORK.
16. CONTRACTOR SHALL COORDINATE CONSTRUCTION SCHEDULE WITH ENGINEER.
17. CONTRACTOR IS RESPONSIBLE FOR PROCURING AND PAYING FOR ANY AND ALL NECESSARY PERMITS AND TEMPORARY CONSTRUCTION EASEMENTS, INCLUDING BUT NOT LIMITED TO BUILDING, ENCROACHMENT AND OR TRANSPORTATION PERMITS.
18. CONTRACTOR IS RESPONSIBLE TO SURVEY THE PROJECT SITE AS NEEDED, AND PROVIDE A SUBMITTAL OF ANY ELEVATIONS TAKEN TO THE CITY ENGINEER.
19. CONTRACTOR SHALL VERIFY LOCATION, SIZE, AND DEPTH OF ALL CROSSING UTILITIES PRIOR TO COMMENCING ALL WORK. CONTRACTOR SHALL PROTECT ALL CROSSING UTILITIES IN PLACE.
20. BYPASSING IS ALLOWED DURING CONSTRUCTION ACTIVITIES BUT TEMPORARY OR PERMANENT SERVICE CONNECTIONS SHALL BE IN PLACE BY THE END OF EACH WORK DAY.
21. PAVEMENT SHALL BE REPAIRED TO THE SAME STRUCTURAL SECTION AS THE EXISTING, PER CALTRANS STANDARDS.
22. ALLEY SURFACING SHALL BE REPAIRED PER CITY OF GRIDLEY STD DTL TB-01A, SHT C-3 FOR AN UNPAVED TRAVEL WAY.
23. ALL STATIONING AND ELEVATIONS ARE APPROXIMATE. CONTRACTOR SHALL VERIFY STATIONING AND ELEVATIONS PRIOR TO COMMENCING ALL WORK.
24. STAKING SHALL BE THE RESPONSIBILITY OF THE CONTRACTOR.
25. UTILITIES SHOWN ON THESE PLANS IS FOR REFERENCE ONLY. IT IS THE CONTRACTORS RESPONSIBILITY TO DETERMINE IF THERE ARE UTILITY CONFLICTS AND FOLLOW THE 811 PROCESS.
26. CONTRACTOR SHALL COORDINATE ALL UTILITY RELOCATIONS WITH THE CITY OR RESPECTIVE UTILITY.

EROSION CONTROL NOTES:

1. ALL EROSION AND SEDIMENT CONTROL MEASURES SHALL BE IMPLEMENTED AS SPECIFIED IN THE CONTRACTOR PREPARED EROSION CONTROL PLAN (ECP) FOR THIS PROJECT OR AS DETERMINED BY THE CITY INSPECTOR. THE ECP IS CONSIDERED A DYNAMIC DOCUMENT AND WILL CHANGE AS CONDITIONS WARRANT. PERMANENT EROSION AND SEDIMENT CONTROL MEASURES WILL BE CONSTRUCTED AS SHOWN ON THE CONTRACTOR-PREPARED, CITY-APPROVED EC PLAN.
2. NON-POTABLE WATER OR CITY METERED WATER SHALL BE SPRAYED ON ALL EXPOSED EARTH SURFACES DURING CLEARING, GRADING, EARTH MOVING, AND OTHER SITE PREPARATION ACTIVITIES. THE EXPOSED EARTH SHALL BE WATERED TWO TIMES PER DAY TO MINIMIZE DUST.
3. SHOULD EXCAVATION OPERATIONS UNCOVER HAZARDOUS MATERIALS, OR WHAT APPEARS TO BE HAZARDOUS MATERIALS, THE FIRE DEPARTMENT SHALL BE CONTACTED IMMEDIATELY AT (530) 868-5834. THE AREA, WHICH CONTAINS THE HAZARDOUS MATERIALS, SHALL BE MARKED OFF UNTIL AN INVESTIGATION BY A MEMBER OF THE FIRE DEPARTMENT IS CONDUCTED.
4. THE CONTRACTOR IS EXPECTED TO COMPLY WITH THE FUGITIVE DUST CONTROL REQUIREMENTS FROM THE BUTTE COUNTY AIR POLLUTION CONTROL DISTRICT: WWW.ARB.CA.GOV
5. CONTAMINATED SOIL – CONTRACTOR AGREES TO PROPERLY ADHERE TO ALL THE CURRENT STATE AND FEDERAL REQUIREMENTS WHEN ANY EVIDENCE OF TOXIC, HAZARDOUS OR CONTAMINATED SOILS ARE ENCOUNTERED DURING ANY AND ALL EXCAVATION OR GRADING OPERATIONS.
6. SUFFICIENT EROSION CONTROL SUPPLIES SHALL BE AVAILABLE ON-SITE AT ALL TIMES TO DEAL WITH AREAS SUSCEPTIBLE TO EROSION DURING RAIN EVENTS.
7. THE CONTRACTOR SHALL MAKE ADEQUATE PREPARATIONS, INCLUDING TRAINING & EQUIPMENT, TO CONTAIN SPILLS OF OIL AND OTHER HAZARDOUS MATERIALS.
8. THE CONTRACTOR SHALL PROVIDE COVERED WASTE RECEPTACLES FOR COMMON SOLID WASTE AT CONVENIENT LOCATIONS ON THE JOB SITE AND PROVIDE REGULAR COLLECTION OF WASTE.
9. THE CONTRACTOR SHALL PROVIDE SANITARY FACILITIES OF SUFFICIENT NUMBER AND SIZE TO ACCOMMODATE CONSTRUCTION CREWS.
10. PROJECT IMPLEMENTATION SHALL CONFORM TO THE EROSION PREVENTION AND SEDIMENT CONTROL BEST MANAGEMENT PRACTICES CONTAINED IN THE LATEST EDITION OF THE FOLLOWING PUBLICATIONS OR AN EQUIVALENT BEST MANAGEMENT PRACTICE:

    CONSTRUCTION SITE BEST MANAGEMENT PRACTICES MANUAL, BY CALTRANS

    STORMWATER BEST MANAGEMENT PRACTICE HANDBOOK, BY THE CALIFORNIA STORMWATER QUALITY ASSOCIATION.

11. IF DISCREPANCIES OCCUR BETWEEN THESE NOTES, MATERIAL REFERENCED HEREIN OR MANUFACTURER'S RECOMMENDATIONS, THEN THE MOST PROTECTIVE SHALL APPLY.
12. EROSION PREVENTION AND SEDIMENT CONTROL MEASURES SHALL BE INSPECTED BY THE CONTRACTOR BEFORE FORECASTED STORM EVENTS AND AFTER ACTUAL STORM EVENTS TO ENSURE MEASURES ARE FUNCTIONING PROPERLY. EROSION PREVENTION AND SEDIMENT CONTROL MEASURES THAT HAVE FAILED OR ARE NO LONGER EFFECTIVE SHALL BE PROMPTLY REPLACED. EROSION PREVENTION AND SEDIMENT CONTROL MEASURERS SHALL BE MAINTAINED UNTIL DISTURBED AREAS ARE STABILIZED.

ABBREVIATIONS:

∠	ANGLE
AB	AGGREGATE BASE
AC	ASBESTOS CEMENT
AP	ANGLE POINT
APPROX	APPROXIMATELY
AVE	AVENUE
BC	BEGIN CURVE
BCR	BEGIN CURB RETURN
BSW	BACK OF SIDEWALK
C&G	CURB AND GUTTER
CG&S	CURB, GUTTER AND SIDEWALK
℄	CENTER LINE
CH	CHORD
CLR	CLEAR
CO	CLEANOUT
CONC	CONCRETE
CONST	CONSTRUCT
CTV	CABLE TV
CR	CURB RETURN
DI	DUCTILE IRON
DRWY	DRIVEWAY
DTL	DETAIL
DWG	DRAWING
EC	END CURVE
ECR	END CURB RETURN
EG	EXISTING GRADE
EJ	EXPANSION JOINT
EL,ELEV	ELEVATION
ELL	ELBOW
EP	EDGE OF PAVEMENT
EX	EXISTING
FC	FACE OF CURB
FD	FOUND
FG	FINISHED GROUND
FH	FIRE HYDRANT
FL	FLOW LINE
FL	FLANGE
FM	FORCE MAIN
G	GAS
GB	GRADE BREAK
GFL	GUTTER FLOW LINE
GR	GRATE
GV	GATE VALVE
HP	HIGH POINT
HR	HANDICAP RAMP
INV	INVERT
IP	IRON PIPE
JP	JOINT POLE
L=	LENGTH
LF	LINEAR FEET
LT	LEFT
LN	LANE
LP	LOW POINT
ME	MAINTENANCE EASEMENT
MH	MANHOLE
MIN	MINIMUM
MJ	MECHANICAL JOINT
MP	MIDPOINT
OH	OVERHEAD
PB	PULL BOX
PCC	POINT OF COMPOUND CURVE
PI	POINT OF INTERSECTION
PL	PROPERTY LINE
PP	POWER POLE
PRC	POINT OF REVERSE CURVE
PS	PLANTER STRIP
PT	POINT
PUE	PUBLIC UTILITY EASEMENT
PVC	POLYVINYL CHLORIDE
PVMT	PAVEMENT
R,R=	RADIUS
RT	RIGHT
R/W	RIGHT-OF-WAY
S=	SLOPE
SD	STORM DRAIN
SDCO	STORM DRAIN CLEANOUT
SDMH	STORM DRAIN MH
SDWK,SW	SIDEWALK
SECT	SECTION
SHT	SHEET
SS	SANITARY SEWER
SSMH	SANITARY SEWER MH
ST	STREET
STA	STATION
T	TELEPHONE
TC	TOP OF CURB
TCE	TEMPORARY CONSTRUCTION ENTRANCE
TYP	TYPICAL
W,WTR	WATER
WV	WATER VALVE
XW	CROSSWALK

TYPICAL LEGEND:

	EXISTING	PROPOSED
ASSESSOR'S PARCEL NO.	25-025-254	25-025-254
SURVEY MONUMENT		
SURVEY BENCHMARK	x 225.0	x 225.0
SPOT ELEVATION	160	160
CONTOUR LINE	C	C
CATCHLINE (CUT)	F	F
CATCHLINE (FILL)		
FLOWLINE	JP	JP
JOINT UTILITY POLE		
UTILITY POLE		
GUY WIRE & ANCHOR		
CENTERLINE		
AC DIKE	X	X
FENCE (CHAINLINK)		
FENCE (WOOD)		
GUARDRAIL		
PROPERTY LINE		
RIGHT-OF-WAY		
TOP OF EMBANKMENT		
TOE OF EMBANKMENT	SD 12"SD SD	SD 12"SD SD
STORM DRAIN	D	D
STORM DRAIN MANHOLE		
STORM DRAIN CATCH BASIN	S 4"SS S	S 4"SS S
SANITARY SEWER	S	S
SANITARY SEWER MANHOLE	CO	CO
SANITARY SEWER CLEANOUT		
AIR RELEASE VALVE		
BLOW-OFF VALVE		
BUTTERFLY VALVE		
CHECK VALVE		
DOUBLE-DETECTOR CHECK VALVE		
FIRE DEPARTMENT CONNECTION		
FIRE HYDRANT		
HOSE BIBB		
IRRIGATION CONTROL VALVE		
POST INDICATOR VALVE	W 12"W W	W 12"W W
WATER MAIN	W	W
WATER MANHOLE	W	W
WATER SERVICE METER	WV	WV
WATER VALVE	W-VLT	W-VLT
WATER VAULT	E	E
ELECTRICAL MANHOLE	E	E
ELECTRICAL PULLBOX	E	E
ELECTRICAL PANEL		
ELECTRICAL TRANSFORMER	E-VLT	E-VLT
ELECTRICAL VAULT	T	T
TELEPHONE MANHOLE	TPED	TPED
TELEPHONE PEDESTAL		
TELEPHONE POLE	T	T
TELEPHONE PULLBOX	T-VLT	T-VLT
TELEPHONE VAULT		
MISC MANHOLE		
STREET LIGHT		
STREET LIGHT PULLBOX	SL	SL
STREET LIGHT W/TRAFFIC SIGNAL		
TRAFFIC SIGNAL		
TRAFFIC SIGNAL PULLBOX	TS	TS
GAS MAIN	g	G
GAS METER	G	G
OVERHEAD JOINT UTILITY LINE		
UNDERGROUND ELECTRICAL	e	E
OVERHEAD ELECTRICAL	e (oh) e (oh)	E (OH) E (OH)
UNDERGROUND TELEPHONE	T	T
OVERHEAD TELEPHONE	T (oh) T (oh)	T (OH) T (OH)
MAILBOX	MB	MB
TREE/TREE WELL		
BUILDING		
SIGN		

NO.	REVISIONS	BY	DATE
6			
5			
4			
3			
2			
1			

BENCH MARK ELEV : 96.08 DATUM : NAVD88
DESCRIPTION :
BASIS OF ELEVATIONS: CM 2.97, 96.08'
BASIS OF BEARINGS: CCS, ZONE 2, NAD 83 (2011) EPOCH 2017.5

DESIGN BY :	A. HOLLADAY
DRAWN BY :	J. GINNEVER
CHECKED BY :	D. HARDEN
SCALE :	AS SHOWN
DATE :	07/23/2024
PROJ NO. :	16607-104

VERIFY SCALE
BAR IS ONE INCH ON ORIGINAL DRAWING.
0 1"
IF NOT ONE INCH ON THIS SHEET, ADJUST SCALES ACCORDINGLY.

REGISTERED PROFESSIONAL ENGINEER DAVID P. HARDEN No. C84216 CIVIL STATE OF CALIFORNIA

BEN|EN
TRUSTED ENGINEERING ADVISORS

Bennett Engineering Services
1082 Sunrise Avenue, Suite 100
Roseville, CA 95661

(916) 783-4100
www.ben-en.com

GRIDLEY CALIFORNIA
CITY OF GRIDLEY

GRIDLEY SR-99 WATER RELOCATION PROJECT

GENERAL NOTES

CALIFORNIA

G-2

2 OF 12

Login Name: jginnever
Plot Date: July 23, 2024 - 12:33 pm, Plot Style: ####
File Name: P:\Proj\16607-104-Gridley-SR99 Waterline\03-PLANS\MASTERS\SHEETS\16604-104_G2 G-2 GENERAL NOTES.dwg
XREFS: XBK-16607-104_H_22X34

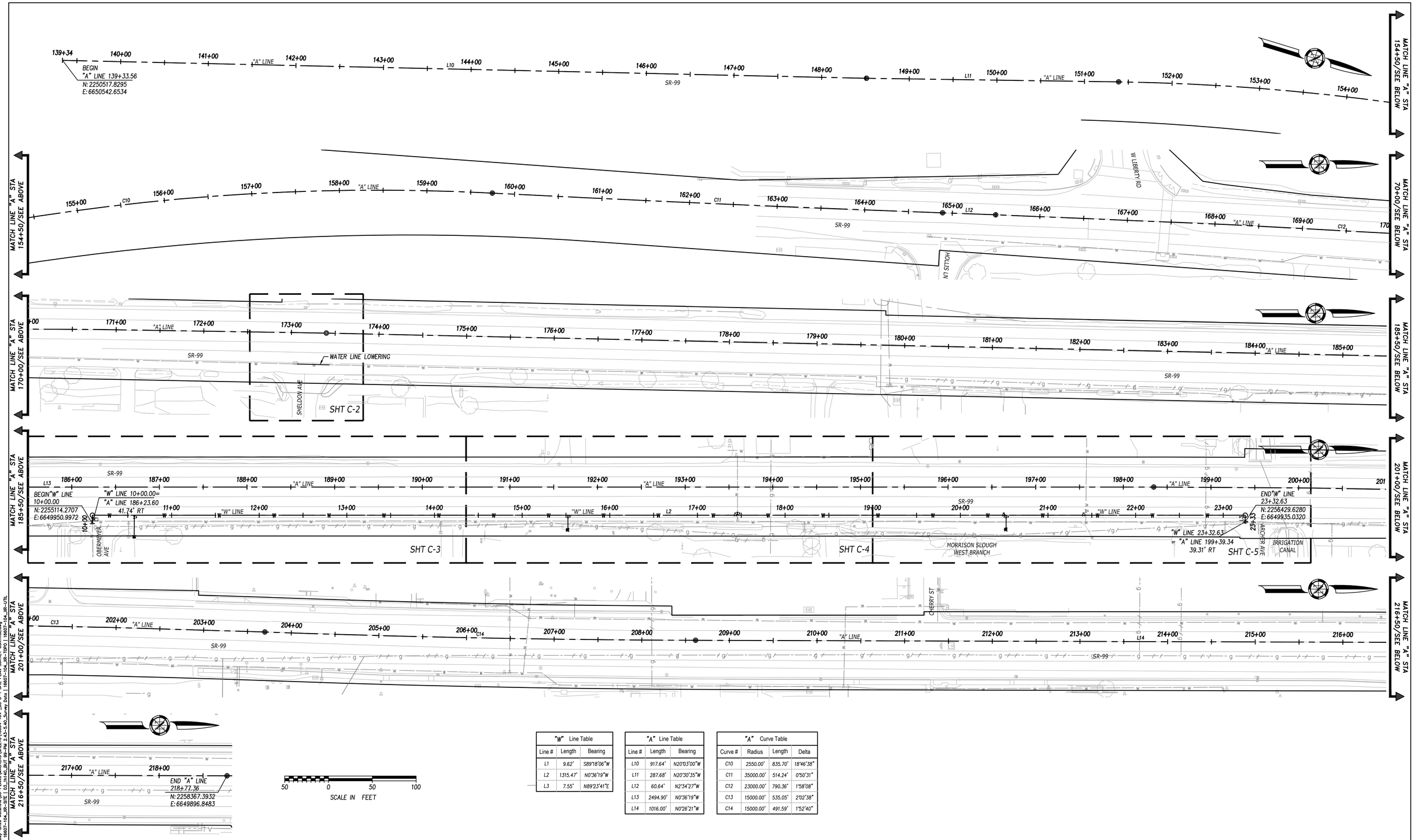

"W" Line Table		
Line #	Length	Bearing
L1	9.62'	S89°18'06"W
L2	1315.47'	N0°36'19"W
L3	7.55'	N89°23'41"E

"A" Line Table		
Line #	Length	Bearing
L10	917.64'	N20°03'00"W
L11	287.68'	N20°30'35"W
L12	60.64'	N2°34'27"W
L13	2494.90'	N0°36'19"W
L14	1016.00'	N0°26'21"W

"A" Curve Table			
Curve #	Radius	Length	Delta
C10	2550.00'	835.70'	18°46'38"
C11	35000.00'	514.24'	0°50'31"
C12	23000.00'	790.36'	1°58'08"
C13	15000.00'	535.05'	2°02'38"
C14	15000.00'	491.59'	1°52'40"

NO.	REVISIONS	BY	DATE
1			
2			
3			
4			
5			
6			

BENCH MARK ELEV : 96.08 DATUM : NAVD88
DESCRIPTION :
BASIS OF ELEVATIONS: CM 2.97, 96.08'
BASIS OF BEARINGS: CCS, ZONE 2, NAD 83
(2011) EPOCH 2017.5

DESIGN BY :	A. HOLLADAY
DRAWN BY :	J. GINNEVER
CHECKED BY :	D. HARDEN
SCALE :	1"=50'
DATE :	07/23/2024
PROJ NO. :	16607-104

VERIFY SCALE
BAR IS ONE INCH ON ORIGINAL DRAWING.
0 1"
IF NOT ONE INCH ON THIS SHEET, ADJUST SCALES ACCORDINGLY.

REGISTERED PROFESSIONAL ENGINEER DAVID P. HARDEN No. C84216 CIVIL STATE OF CALIFORNIA

BEN|EN TRUSTED ENGINEERING ADVISORS

Bennett Engineering Services
1082 Sunrise Avenue, Suite 100
Roseville, CA 95661
(916) 783-4100
www.ben-en.com

GRIDLEY BUILT ON ICE CITY OF GRIDLEY

GRIDLEY SR-99 WATER RELOCATION PROJECT

SURVEY CONTROL AND KEY SHEET

CALIFORNIA

C-1

Login Name: jginnever
Plot Date: July 23, 2024 – 12:34 pm; Plot Style: ####
File Name: P:\Proj\16607-104-Gridley-SR99 Waterline\CS-PLANS\MASTERS\SHEETS\16604-104 _03 C-1 SITE PLAN SURVEY CONTROL.dwg
XREFS: BDR-16607-104_A_C20x24 | 16607-104_XR-SITE | D3_TITLE_BLK | 16607-104_XR-TOPO | 16607-104_XR-UTIL

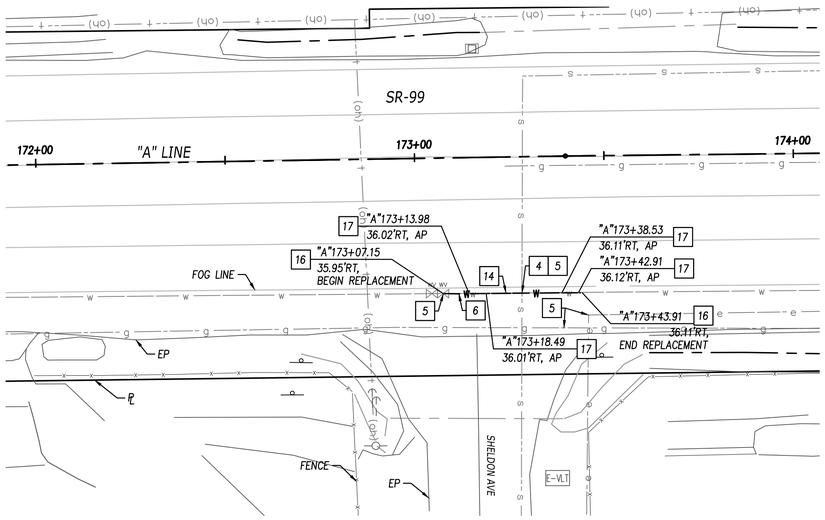

SHELDON AVE WATER MAIN LOWERING

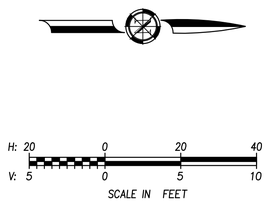

CONSTRUCTION NOTES:

4	MAINTAIN A MINIMUM 12" VERTICAL SEPARATION BETWEEN UTILITIES
5	PROTECT IN PLACE
6	REMOVE EXISTING WATER LINE
14	INSTALL 10" DIP WATER MAIN PER GRIDLEY STANDARD DTLS W-3, W-5, & W-15, SEE SHT C-6
16	LOWER WATER LINE PER DTL 1, SEE SHT C-7
17	INSTALL 10" 45° ELL

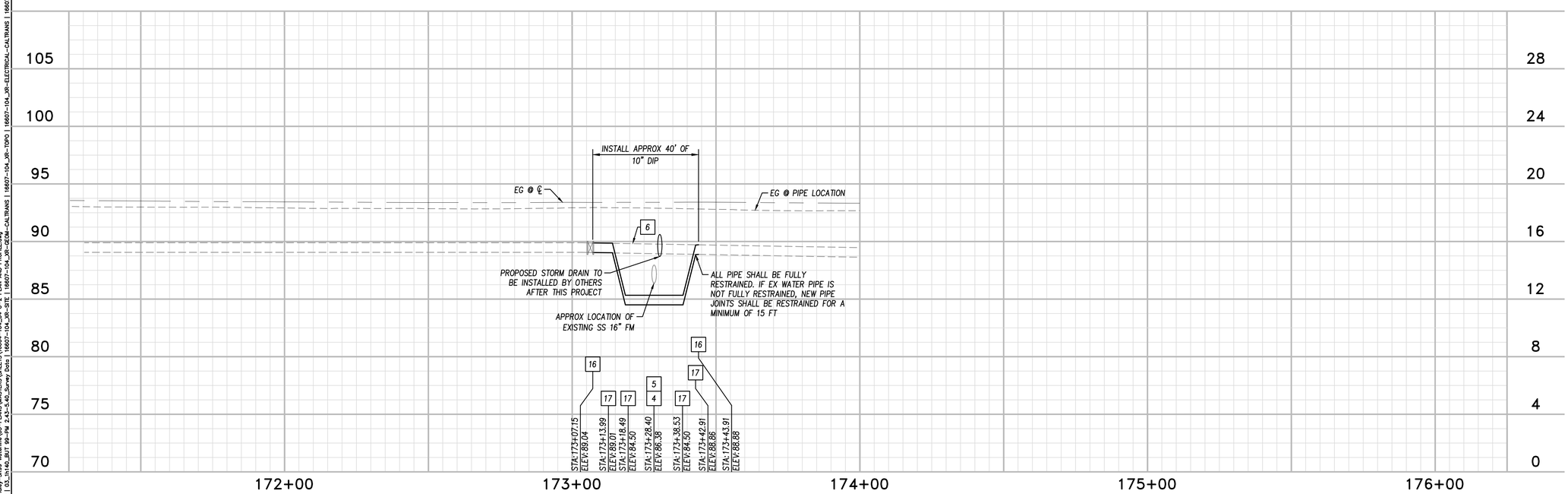

NO.	REVISIONS	BY	DATE
6			
5			
4			
3			
2			
1			

BENCH MARK ELEV : 96.08 DATUM : NAVD88
DESCRIPTION :
BASIS OF ELEVATIONS: CM 2.97, 96.08'
BASIS OF BEARINGS: CCS, ZONE 2, NAD 83
(2011) EPOCH 2017.5

DESIGN BY :	A. HOLLADAY
DRAWN BY :	J. GINNEVER
CHECKED BY :	D. HARDEN
SCALE :	H:1"=20' V:1"=5'
DATE :	07/23/2024
PROJ NO. :	16607-104

VERIFY SCALE
BAR IS ONE INCH ON ORIGINAL DRAWING.
0 1"
IF NOT ONE INCH ON THIS SHEET, ADJUST SCALES ACCORDINGLY.

REGISTERED PROFESSIONAL ENGINEER DAVID P. HARDEN C84216 CIVIL STATE OF CALIFORNIA

BEN|EN
TRUSTED ENGINEERING ADVISORS

Bennett Engineering Services
1082 Sunrise Avenue, Suite 100
Roseville, CA 95661
(916) 783-4100
www.ben-en.com

GRIDLEY CALIFORNIA
CITY OF GRIDLEY

GRIDLEY SR-99 WATER RELOCATION PROJECT

PLAN AND PROFILE
"A" LINE STA 172+00 to STA 174+00

CALIFORNIA

C-2
4 OF 12

Login Name: jginnever
Plot Date: July 23, 2024 – 12:34 pm; Plot Style: ####
File Name: P:\Proj\16607-104-Gridley-SR99 Waterline\03-PLANS\MASTERS\SHEETS\16604-104_04 C-2 PLAN AND PROFILE.dwg
XREFS: BDR-16607-104_J_22x24 | 03_Int40_BUT 99-PM 2.43-5.40_Survey Data | 16607-104_XR-SITE | 16607-104_XR-REDM-CALTRANS | 16607-104_XR-TOPO | 16607-104_XR-ELECTRICAL-CALTRANS | 16607-104_XR-DRAINAGE-CALTRANS | 16607-104_XR-UTIL

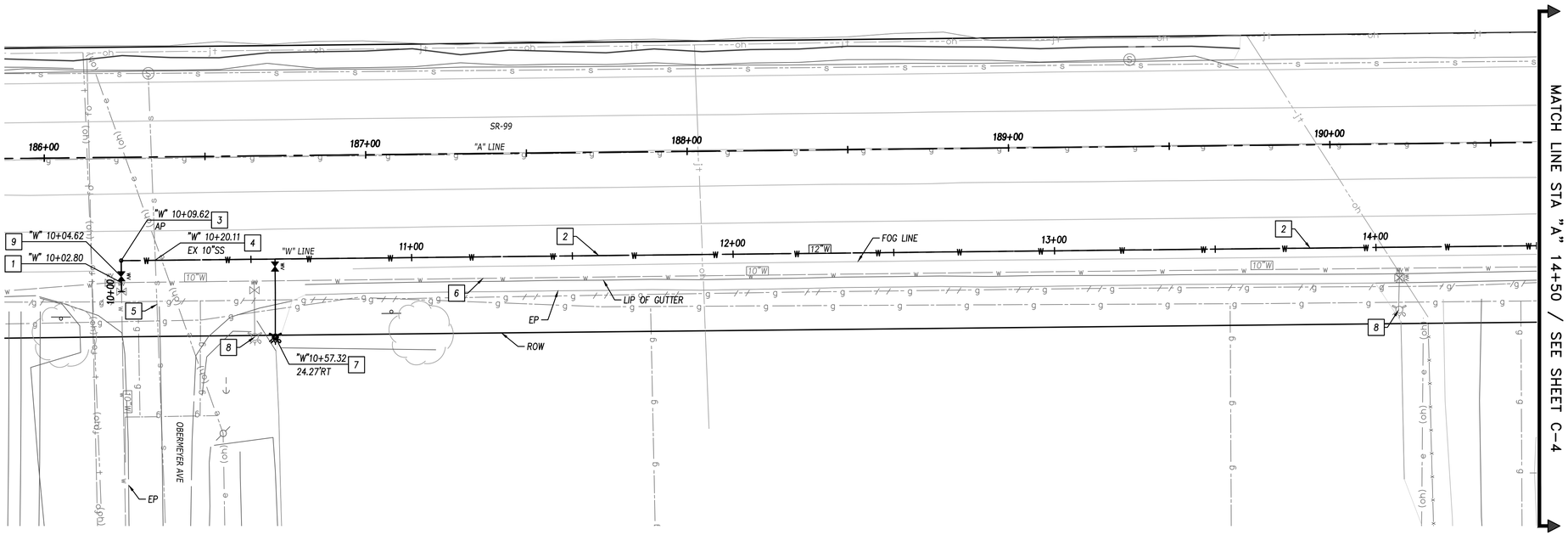

CONSTRUCTION NOTES:

1. TIE INTO EXISTING WATER LINE PER DTL 2, SEE SHT C-7
2. INSTALL 12" DR-18 C-900 WATER MAIN PER GRIDLEY STANDARD DTLS W-3, W-5, & W-15, SEE SHT C-6
3. INSTALL 12" 90° ELL
4. MAINTAIN A MINIMUM 12" VERTICAL SEPARATION BETWEEN UTILITIES
5. PROTECT IN PLACE
6. REMOVE EXISTING WATER LINE
7. INSTALL NEW FIRE HYDRANT AND ASSEMBLY PER GRIDLEY STANDARD DTL W-1, SEE SHT C-6
8. REMOVE EXISTING FIRE HYDRANT ASSEMBLY, RETURN TO CITY
9. INSTALL 12" RESILIENT WEDGE GATE VALVE PER GRIDLEY STANDARD DETAIL W-5, SEE SHT C-6

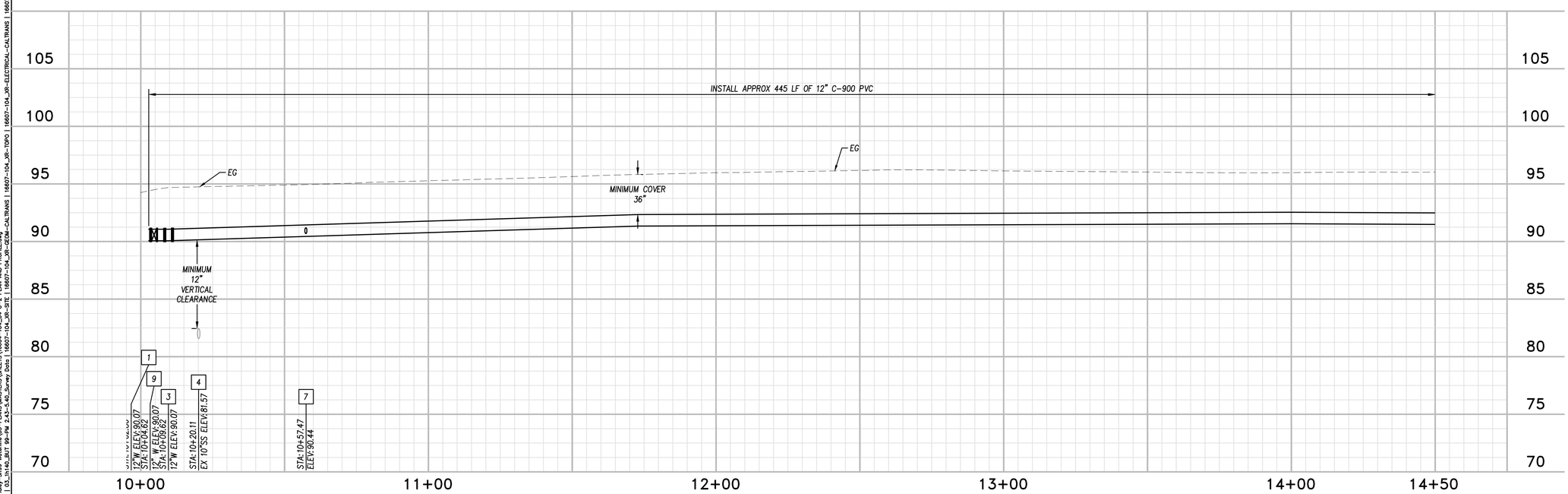

H: 20 0 20 40
V: 5 0 5 10
SCALE IN FEET

NO.	REVISIONS	BY	DATE
6			
5			
4			
3			
2			
1			

BENCH MARK ELEV : 96.08 DATUM : NAVD88
DESCRIPTION :
BASIS OF ELEVATIONS: CM 2.97, 96.08'
BASIS OF BEARINGS: CCS, ZONE 2, NAD 83
(2011) EPOCH 2017.5

DESIGN BY :	A. HOLLADAY
DRAWN BY :	J. GINNEVER
CHECKED BY :	D. HARDEN
SCALE :	H:1"=20' V:1"=5'
DATE :	07/23/2024
PROJ NO. :	16607-104

VERIFY SCALE
BAR IS ONE INCH ON ORIGINAL DRAWING.
0 1"
IF NOT ONE INCH ON THIS SHEET, ADJUST SCALES ACCORDINGLY.

REGISTERED PROFESSIONAL ENGINEER DAVID P. HARDEN C84216 CIVIL STATE OF CALIFORNIA

BEN|EN
TRUSTED ENGINEERING ADVISORS

Bennett Engineering Services
1082 Sunrise Avenue, Suite 100
Roseville, CA 95661
(916) 783-4100
www.ben-en.com

GRIDLEY CALIFORNIA
CITY OF GRIDLEY

GRIDLEY SR-99 WATER RELOCATION PROJECT

PLAN AND PROFILE
"W" LINE STA 10+00 to STA 14+50

CALIFORNIA

C-3
5 OF 12

Login Name: jginnever
Plot Date: July 23, 2024 – 12:34 pm; Plot Style: ####
File Name: P:\Proj\16607-104-Gridley-SR99 Waterline\03-PLANS\MASTERS\SHEETS\16604-104_04 C-2 PLAN AND PROFILE.dwg
XREFS: BGM-16607-104_J_22x24 | 03_Int40_BUT 99-PM 2.45-5.40_Survey Data | 16607-104_XR-SITE | 16607-104_XR-REDM-CALTRANS | 16607-104_XR-TOPO | 16607-104_XR-ELECTRICAL-CALTRANS | 16607-104_XR-UTIL

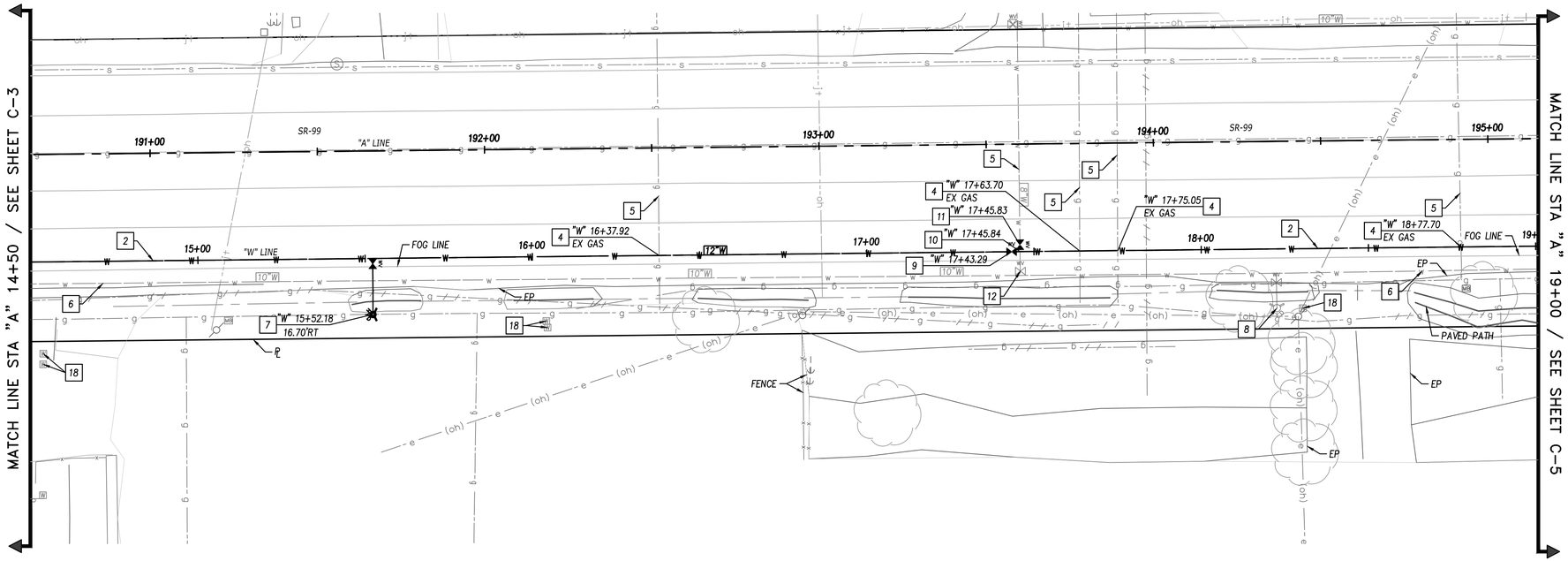

CONSTRUCTION NOTES:

2	INSTALL 12" DR-18 C-900 WATER MAIN PER GRIDLEY STANDARD DTLS W-3, W-5, & W-15, SEE SHT C-6
4	MAINTAIN A MINIMUM 12" VERTICAL SEPARATION BETWEEN UTILITIES
5	PROTECT IN PLACE
6	REMOVE EXISTING WATER LINE
7	INSTALL NEW FIRE HYDRANT AND ASSEMBLY PER GRIDLEY STANDARD DTL W-1, SEE SHT C-6
8	REMOVE EXISTING FIRE HYDRANT ASSEMBLY, RETURN TO CITY
9	INSTALL 12" RESILIENT WEDGE GATE VALVE PER GRIDLEY STANDARD DETAIL W-5, SEE SHT C-6
10	CONNECT TO EX WATER MAIN PER DTL 3, SEE SHT C-7
11	INSTALL 8" RESILIENT GATE VALVE PER GRIDLEY STANDARD DTL W-5, SEE SHT C-6
18	WATER METER, RECONNECT ALL ACTIVE SERVICES.

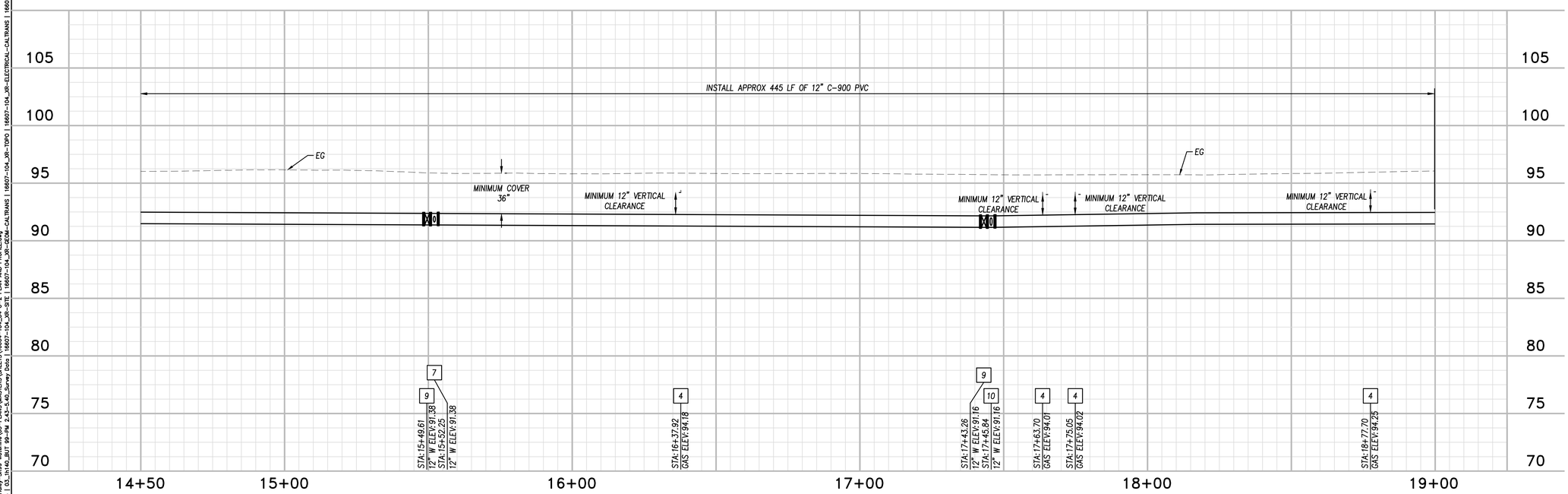

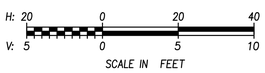

NO.	REVISIONS	BY	DATE
6			
5			
4			
3			
2			
1			

BENCH MARK ELEV : 96.08 DATUM : NAVD88
DESCRIPTION :
BASIS OF ELEVATIONS: CM 2.97, 96.08'
BASIS OF BEARINGS: CCS, ZONE 2, NAD 83
(2011) EPOCH 2017.5

DESIGN BY :	A. HOLLADAY
DRAWN BY :	J. GINNEVER
CHECKED BY :	D. HARDEN
SCALE :	1"=20'
DATE :	07/23/2024
PROJ NO. :	16607-104

VERIFY SCALE
BAR IS ONE INCH ON ORIGINAL DRAWING.
0 1"
IF NOT ONE INCH ON THIS SHEET, ADJUST SCALES ACCORDINGLY.

REGISTERED PROFESSIONAL ENGINEER DAVID P. HARDEN C84216 CIVIL STATE OF CALIFORNIA

BEN|EN
TRUSTED ENGINEERING ADVISORS

Bennett Engineering Services
1082 Sunrise Avenue, Suite 100
Roseville, CA 95661
(916) 783-4100
www.ben-en.com

GRIDLEY CALIFORNIA
CITY OF GRIDLEY

GRIDLEY SR-99 WATER RELOCATION PROJECT

PLAN AND PROFILE
"W" LINE STA 14+50 to STA 19+00

CALIFORNIA

C-4
6 OF 12

Login Name: jginnever
Plot Date: July 23, 2024 – 12:34 pm; Plot Style: ####
File Name: P:\Proj\16607-104-Gridley-SR99 Waterline\03-PLANS\MASTERS\SHEETS\16604-104_04 C-2 PLAN AND PROFILE.dwg
XREFS: BDR-16607-104_J_22x24 | 03_Tnt40_BUT 99-PM 2.43-5.40_Survey Data | 16607-104_XR-SITE | 16607-104_XR-REDM-CALTRANS | 16607-104_XR-TOPO | 16607-104_XR-ELECTRICAL-CALTRANS | 16607-104_XR-UTIL

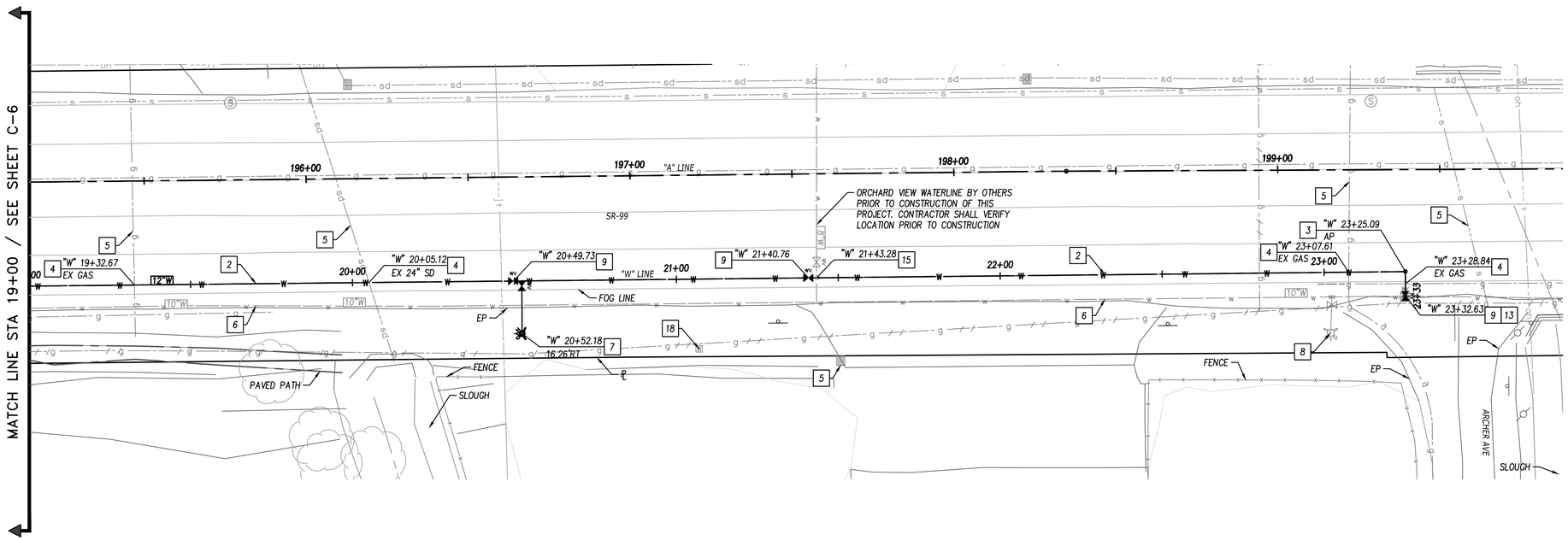

CONSTRUCTION NOTES:

2	INSTALL 12" DR-18 C-900 WATER MAIN PER GRIDLEY STANDARD DTLS W-3, W-5, & W-15, SEE SHT C-6
3	INSTALL 12" 90° ELL
4	MAINTAIN A MINIMUM 12" VERTICAL SEPARATION BETWEEN UTILITIES
5	PROTECT IN PLACE
6	REMOVE EXISTING WATER LINE
7	INSTALL NEW FIRE HYDRANT AND ASSEMBLY PER GRIDLEY STANDARD DTL W-1, SEE SHT C-6
8	REMOVE EXISTING FIRE HYDRANT ASSEMBLY, RETURN TO CITY
9	INSTALL 12" RESILIENT WEDGE GATE VALVE PER GRIDLEY STANDARD DETAIL W-5, SEE SHT C-6
13	TIE INTO EXISTING WATER MAIN PER DTL 4, SEE SHT C-7
15	CONNECT TO EX WATER MAIN PER DTL 5, 1, SEE SHT C-7
18	WATER METER, RECONNECT ALL ACTIVE SERVICES.

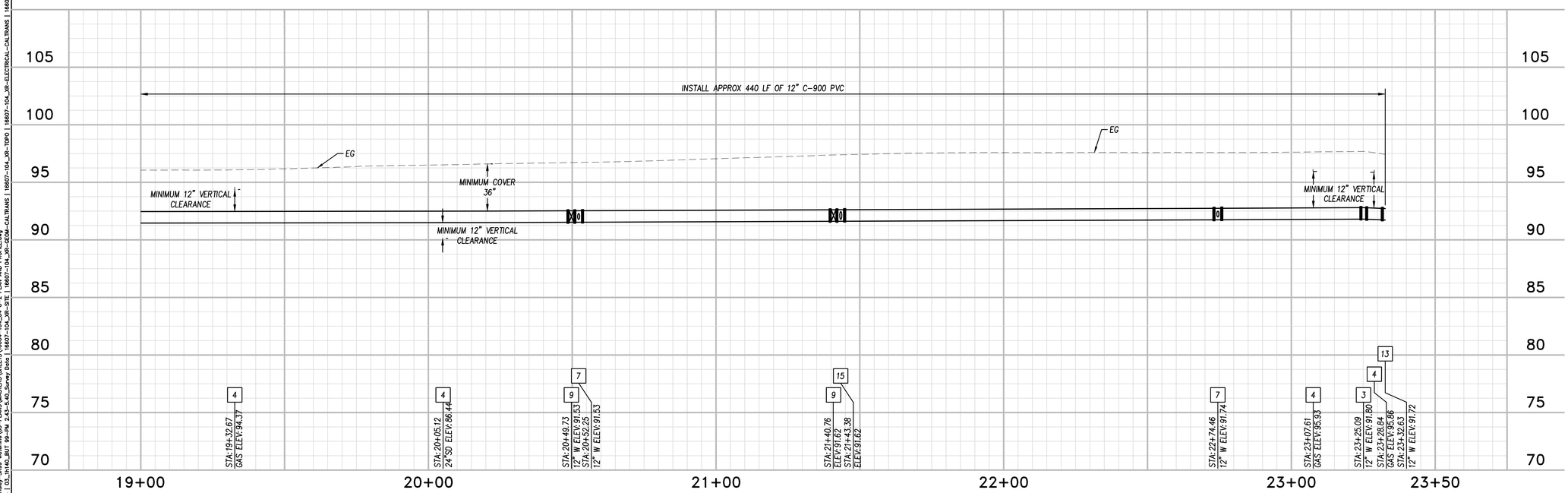

H: 20 0 20 40
V: 5 0 5 10
SCALE IN FEET

NO.	REVISIONS	BY	DATE
6			
5			
4			
3			
2			
1			

BENCH MARK ELEV : 96.08 DATUM : NAVD88
DESCRIPTION :
BASIS OF ELEVATIONS: CM 2.97, 96.08'
BASIS OF BEARINGS: CCS, ZONE 2, NAD 83
(2011) EPOCH 2017.5

DESIGN BY :	A. HOLLADAY
DRAWN BY :	J. GINNEVER
CHECKED BY :	D. HARDEN
SCALE :	H:1"=20' V:1"=5'
DATE :	07/23/2024
PROJ NO. :	16607-104

VERIFY SCALE
BAR IS ONE INCH ON ORIGINAL DRAWING.
0 1"
IF NOT ONE INCH ON THIS SHEET, ADJUST SCALES ACCORDINGLY.

REGISTERED PROFESSIONAL ENGINEER DAVID P. HARDEN C84216 CIVIL STATE OF CALIFORNIA

BEN|EN
TRUSTED ENGINEERING ADVISORS

Bennett Engineering Services
1082 Sunrise Avenue, Suite 100
Roseville, CA 95661
(916) 783-4100
www.ben-en.com

GRIDLEY CALIFORNIA
CITY OF GRIDLEY

GRIDLEY SR-99 WATER RELOCATION PROJECT

PLAN AND PROFILE
"W" LINE STA 19+00 to STA 23+50

CALIFORNIA

C-5
7 OF 12

Login Name: jginnever
Plot Date: July 23, 2024 – 12:35 pm; Plot Style: ####
File Name: P:\Proj\16607-104-Gridley-SR99 Waterline\03-PLANS\MASTERS\SHEETS\16604-104_04 C-2 PLAN AND PROFILE.dwg
XREFS: BGM-16607-104_Jul_22x24 | 03_Int40_BUT 99-PM 2.4/5.40_Survey Data | 16607-104_XR-SITE | 16607-104_XR-GEOM-CALTRANS | 16607-104_XR-TOPO | 16607-104_XR-ELECTRICAL-CALTRANS | 16607-104_XR-UTIL

W-03 THRUST BLOCKS

TYPE OF FITTING		90° BEND	45° BEND	11 1/2° OR 22 1/2° BEND
TYPICAL INSTALLATION				
		REQUIRED BEARING – TOTAL SQUARE FEET		
SIZE OF PIPE	4"	2	1	1
	6"	4	2	1
	8"	7	4	2
	10"	12	6	3
	12"	16	10	5

TYPE OF FITTING		TEE OR DEAD END	TEE WITH PLUG
TYPICAL INSTALLATION			
		REQUIRED BEARING – TOTAL SQUARE FEET	
SIZE OF PIPE	4"	2	2
	6"	3	4
	8"	5	7
	10"	8	12
	12"	12	16

REQUIRED LENGTH (FT) OF RESTRAINED JOINT PIPE	PIPE SIZE			
	6"	8"	10"	12"
90° BEND	29	38	45	52
45° BEND	12	16	19	22
22 1/2° BEND	6	8	9	11
11 1/4° BEND	3	4	5	6
TEE WITH PLUG	61	80	96	112
TEE (RUN LENGTH 10FT)	50	69	84	101

NOTES:
1. ALL JOINTS AND PIPE LENGTHS SHALL BE FULLY RESTRAINED. THRUST BLOCKS SHALL ONLY BE USED WITH PRIOR APPROVAL BY THE CITY.
2. INSTALL FULL LENGTH JOINTS WITH TOTAL LENGTH EQUAL TO OR GREATER THAN SHOWN IN THE REQUIRED LENGTH OF RESTRAINED JOINT PIPE TABLE.
3. THRUST BLOCKS TO BE CONSTRUCTED OF MINOR CONCRETE.
4. AREAS GIVEN ARE FOR CLASS 150 PIPE AT TEST PRESSURE OF 150 P.S.I. IN SOIL WITH 2,000 P.S.F. BEARING CAPACITY. INSTALLATIONS USING DIFFERENT PIPE, TEST PRESSURES, AND/OR SOIL TYPES SHOULD ADJUST AREAS ACCORDINGLY, SUBJECT TO APPROVAL OF ENGINEER.
5. BLOCKS TO BE POURED AGAINST UNDISTURBED SOIL.
6. JOINTS TO BE KEPT CLEAR OF CONCRETE.
7. BLOCKS TO BE IN PLACE 7 (SEVEN) DAYS BEFORE TESTING.
8. ALL PLUGS SHALL BE SECURED WITH THRUST BLOCKS.

NO.	REVISION DATE	BY

DRAWN BY: A. HOLLADAY
CHECKED BY: D. HARDEN
SCALE: NONE
DATE: 09/25/23

THRUST BLOCKS

CITY OF GRIDLEY
DEPARTMENT OF PUBLIC WORKS

APPROVED BY: DAVID HARDEN
CITY ENGINEER
RCE 84216

W-03

W-04 GATE VALVE & BOX

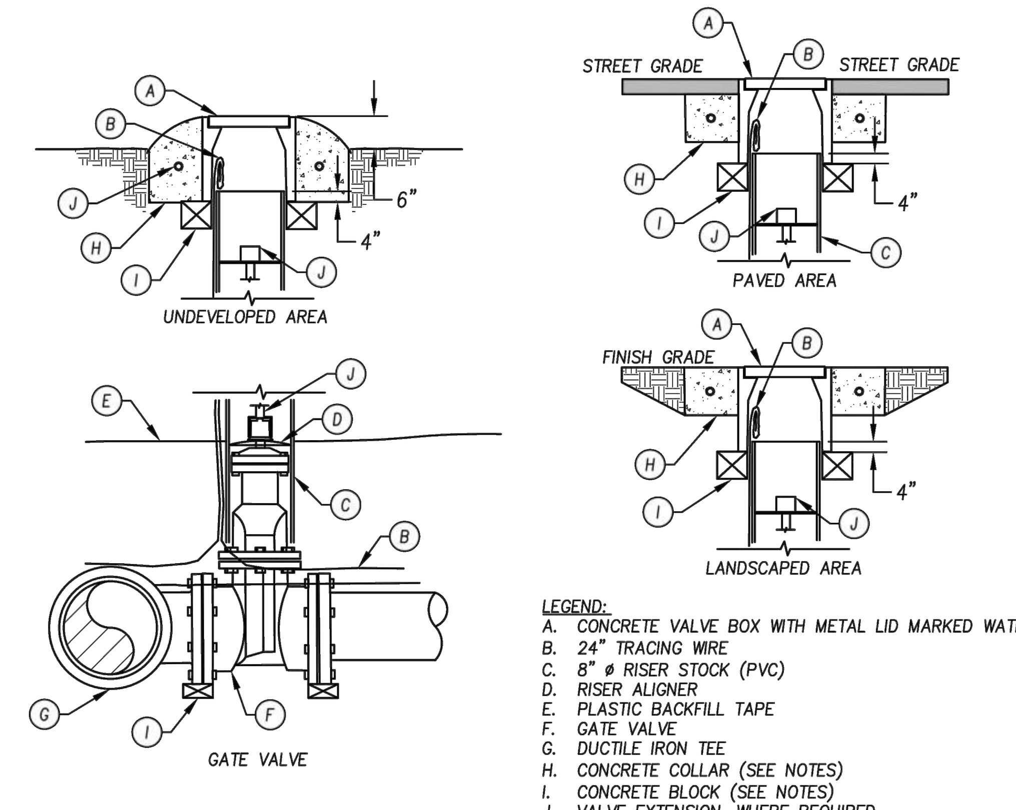

LEGEND:
A. CONCRETE VALVE BOX WITH METAL LID MARKED WATER
B. 24" TRACING WIRE
C. 8" ø RISER STOCK (PVC)
D. RISER ALIGNER
E. PLASTIC BACKFILL TAPE
F. GATE VALVE
G. DUCTILE IRON TEE
H. CONCRETE COLLAR (SEE NOTES)
I. CONCRETE BLOCK (SEE NOTES)
J. VALVE EXTENSION, WHERE REQUIRED

NOTES:
1. ALL GATE VALVES SHALL BE CENTERED IN A ONE PIECE RISER STOCK WITH THE USE OF A RISER ALIGNER.
2. OPERATOR NUTS DEEPER THAN 40" FROM FINISH GRADE SHALL REQUIRE A VALVE NUT EXTENSION 2' MINIMUM IN LENGTH.
3. VALVE BOXES LOCATED IN A PAVED AREA SHALL BE PLACED IN A 12" X 12" DEEP CONCRETE COLLAR A MINIMUM OF 2" BELOW PAVEMENT.
4. VALVE BOXES LOCATED IN A LANDSCAPED AREA SHALL BE PLACED IN A 6" X 6" CONCRETE COLLAR AT FINISHED GRADE.
5. VALVE BOXES LOCATED IN AN UNDEVELOPED AREA SHALL BE PLACED IN A 12" DEEP BY 6" WIDE CONCRETE COLLAR 6" ABOVE GRADE.
6. INSTALL (4" X 4" CONCRETE BLOCK) UNDER ENTIRE PERIMETER OF BOX OR COMPACTED AB.
7. VALVES AND FITTINGS SHALL BE WRAPPED AND SEALED IN 10 MIL POLYETHYLENE.
8. VALVE RISER STOCK SHALL BE A MINIMUM OF 4" INSIDE VALVE BOX.
9. TRACING WIRE SHALL BE CONTINUOUS BETWEEN MAINLINE VALVE BOXES AND FIRE HYDRANTS. IT SHALL BE ATTACHED TO THE TOP OF THE PIPE WITH 10 MIL VINYL TAPE EVERY FEET.
10. OPERATING NUT EXTENSION W/ 7" DIA. PLATE WASHER WELDED TO EXTENSION AT MIDPOINT OF ROD. (MIN LENGTH OF EXTENSION ROD SHALL BE 2')
11. AN OPERATING NUT SHALL BE DRILLED AND TAPPED FOR 2 (1/4" DIA) SCREWS. SET SCREW TO EXTEND 1/8" INTO VALVE NUT.
12. VALVE BOX SHALL BE CHRISTY G5, BES G5 9 1/2" TRAFFIC BOX TYPE K-6016 OR APPROVED EQUAL MARKED WATER.

NO.	REVISION DATE	BY

DRAWN BY: A. HOLLADAY
CHECKED BY: D. HARDEN
SCALE: NONE
DATE: 09/25/23

GATE VALVE & BOX

CITY OF GRIDLEY
DEPARTMENT OF PUBLIC WORKS

APPROVED BY: DAVID HARDEN
CITY ENGINEER
RCE 84216

W-04

W-05 LOCATING WIRE FOR WATER MAINS AND SERVICES

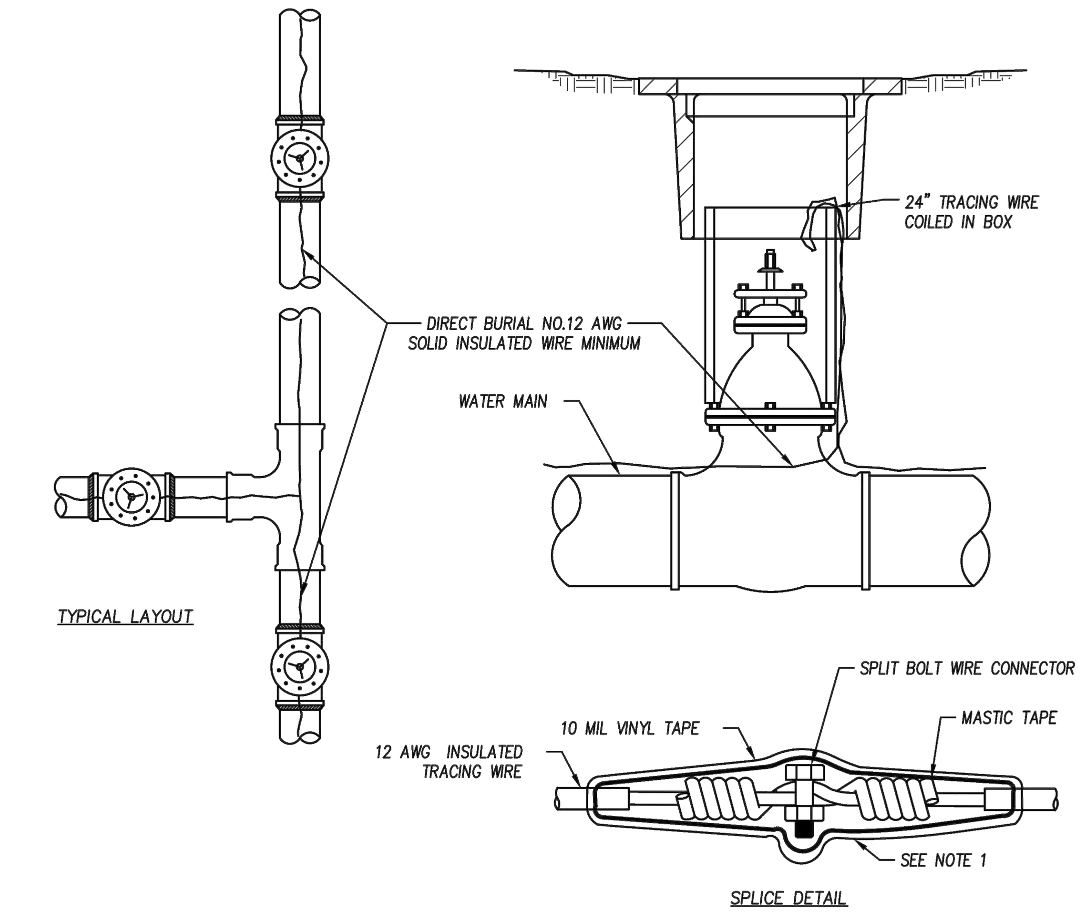

NOTES:
1. TWIST THE WIRE A MINIMUM OF 5 TIMES ON EACH END. INSTALL SPLIT BOLT CONNECTOR. SOLDER WIRE AND COVER THE ENTIRE SPLICE WITH 10 MIL VINYL TAPE. WIRE SPLICES SHALL BE LOCATED WITHIN A VALVE BOX.
2. TRACING WIRE TO BE CONTINUOUS BETWEEN VALVE BOXES AND FIRE HYDRANTS, EXCEPT WHERE BOXES ARE WITHIN 10' OF PIPE INTERSECTION.
3. TRACING WIRE TO BE ATTACHED TO THE TOP OF THE PIPE WITH 10 MIL VINYL TAPE EVERY 5'.
4. TRACING WIRES THROUGH VALVE BOX SHALL BE PLACED OUTSIDE OF RISER, BUT INSIDE THE BOX.
5. TRACING WIRE IN MANHOLES AND VAULTS SHALL BE ATTACHED INSIDE THE FACILITY WITHIN ONE FOOT OF THE RIM.
6. LOCATING WIRE MUST BE TESTED FOR CONTINUITY & BE IN WORKING ORDER AFTER ALL UNDERGROUND WORK IS DONE AND PRIOR TO STREET PAVING.

NO.	REVISION DATE	BY

DRAWN BY: A. HOLLADAY
CHECKED BY: D. HARDEN
SCALE: NONE
DATE: 09/25/23

LOCATING WIRE FOR WATER MAINS AND SERVICES

CITY OF GRIDLEY
DEPARTMENT OF PUBLIC WORKS

APPROVED BY: DAVID HARDEN
CITY ENGINEER
RCE 84216

W-05

W-15 WATER MAIN TRENCH AND BACKFILL

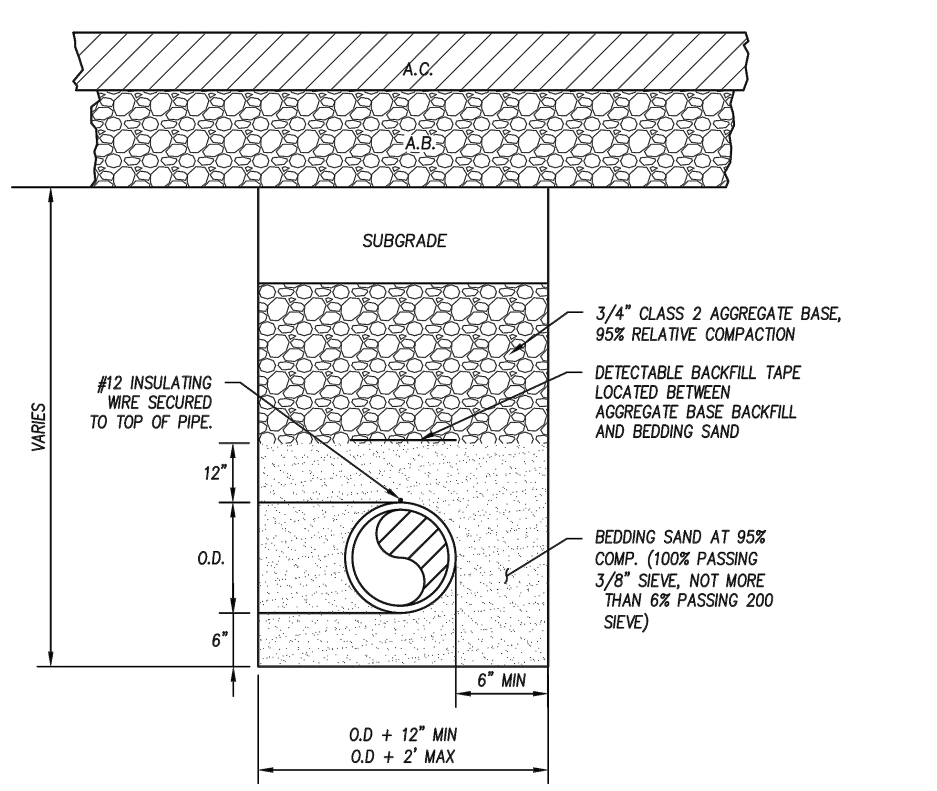

TRENCH BACKFILL REQUIREMENTS:
A. PROPOSED STREETS– REFER TO DETAIL TB-1A AND TB-1B FOR BACKFILL REQUIREMENTS ABOVE THE PIPE ZONE.

NOTES:
1. BACKFILL SHALL BE MECHANICALLY CONSOLIDATED OR SHOVEL SLICED UNDER THE HAUNCHES OF THE PIPE.
2. IN ROCKY OR UNYIELDING SOIL, THE TRENCH SHALL BE EXCAVATED A MINIMUM OF 12" BELOW THE PIPE AND THE TRENCH WIDTH SHALL BE INCREASED BY 12".
3. ONE 12" WIDE STRIP OF BACKFILL TAPE SHALL BE USED FOR EVERY 12" PIPE DIAMETER OR FRACTION THERE OF. BACKFILL TAPE SHALL BE BLUE, MARKED "WATER MAIN BURIED BELOW" AND APPROVED FOR EXTENDED UNDERGROUND USE.
4. THERE MUST BE A MINIMUM OF 36" COVER FROM THE TOP OF THE PIPE TO THE FINISHED GRADE.

NO.	REVISION DATE	BY

DRAWN BY: A. HOLLADAY
CHECKED BY: D. HARDEN
SCALE: NONE
DATE: 09/25/23

WATER MAIN TRENCH AND BACKFILL

CITY OF GRIDLEY
DEPARTMENT OF PUBLIC WORKS

APPROVED BY: DAVID HARDEN
CITY ENGINEER
RCE 84216

W-15

1 MODIFIED FIRE HYDRANT INSTALLATION AT OBERMYER

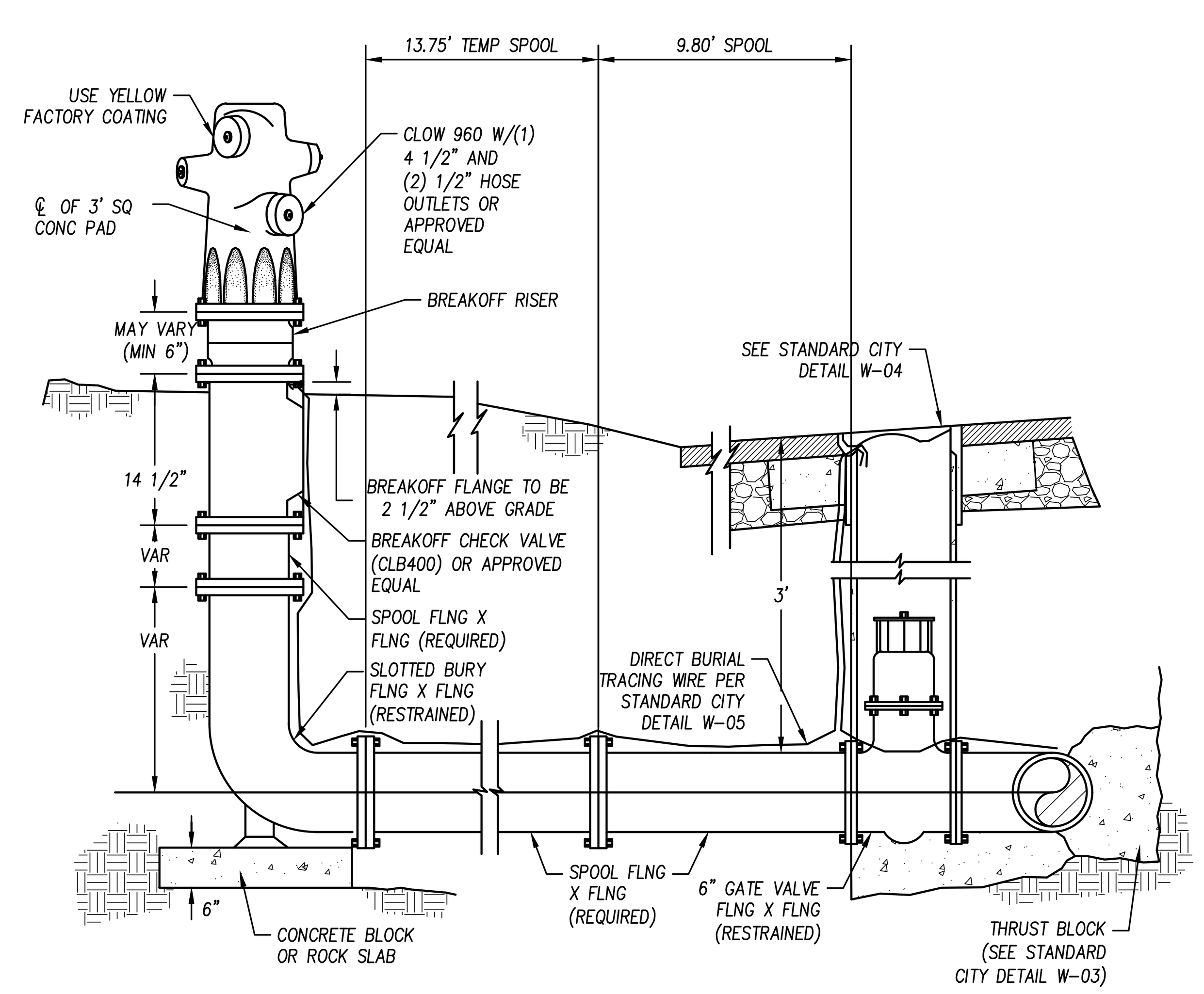

NOTES:
1. BLUE REFLECTIVE PAVEMENT MARKERS SHALL BE PLACED 6" FROM CENTERLINE STRIPE ON THE SIDE NEAREST THE FIRE HYDRANT ON A TWO OR MULTI-LANE STREET.
2. TWO MARKERS ARE REQUIRED AT AN INTERSECTION HAVING A FIRE HYDRANT. THE MARKER SHALL BE PLACED 6" FROM THE EDGE OF THE CONTINUOUS LEFT TURN LANE LINE ON THE SIDE NEAREST THE FIRE HYDRANT.
3. FOR A FOUR LANE STREET WITH TURN LANE AT INTERSECTION THE MARKER SHALL BE PLACED 6" FROM THE NEAREST WHITE LANE LINE ON THE SIDE NEAREST THE FIRE HYDRANT.
4. ASSEMBLY SHALL BE FULLY RESTRAINED.
5. FIRE HYDRANT TO BE RELOCATED DURING CALTRANS PROJECT.

1 / - MODIFIED FIRE HYDRANT INSTALLATION AT OBERMYER
NTS

2 MODIFIED FIRE HYDRANT INSTALLATIONS SOUTH OF ARCHER

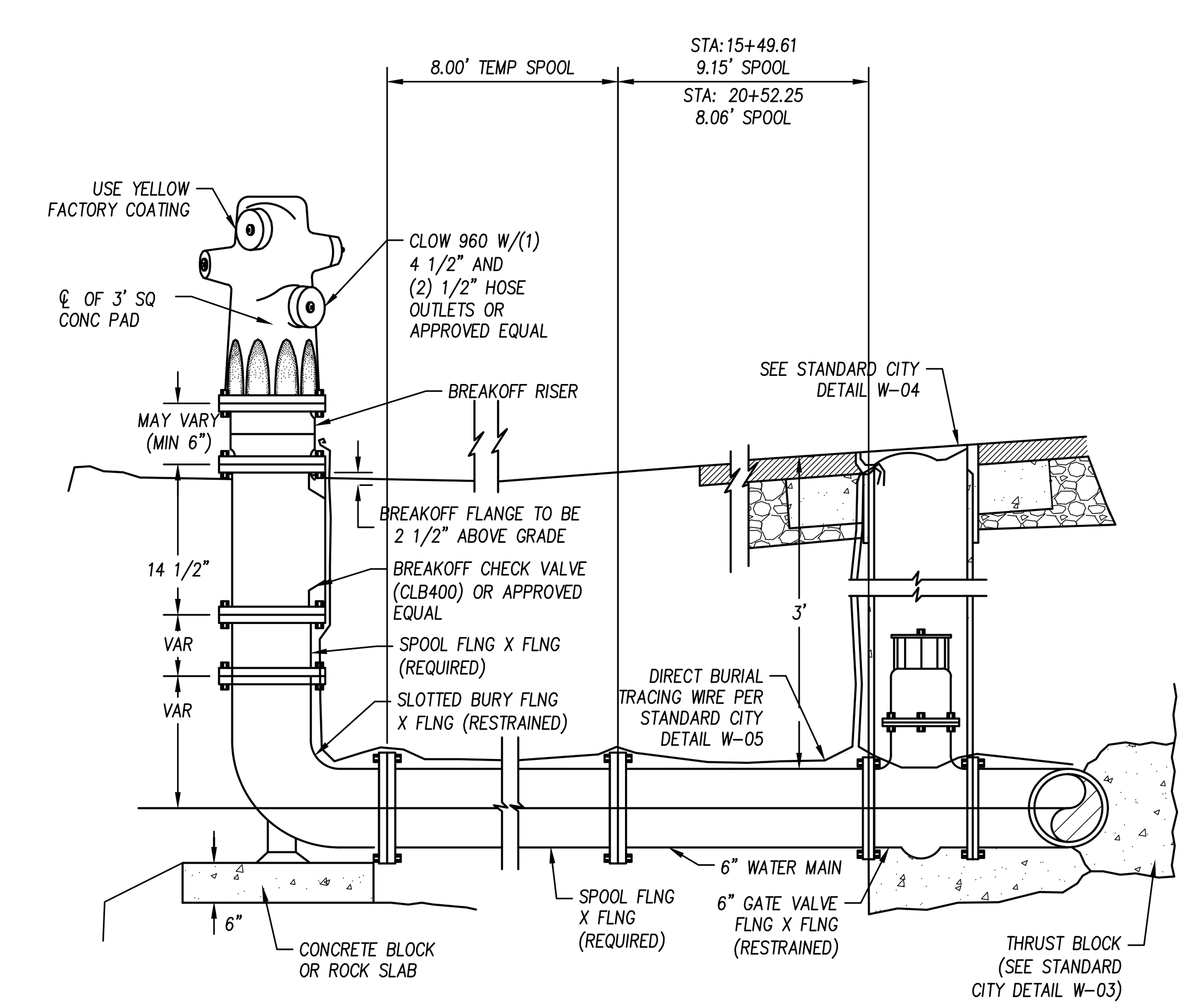

NOTES:
1. BLUE REFLECTIVE PAVEMENT MARKERS SHALL BE PLACED 6" FROM CENTERLINE STRIPE ON THE SIDE NEAREST THE FIRE HYDRANT ON A TWO OR MULTI-LANE STREET.
2. TWO MARKERS ARE REQUIRED AT AN INTERSECTION HAVING A FIRE HYDRANT. THE MARKER SHALL BE PLACED 6" FROM THE EDGE OF THE CONTINUOUS LEFT TURN LANE LINE ON THE SIDE NEAREST THE FIRE HYDRANT.
3. FOR A FOUR LANE STREET WITH TURN LANE AT INTERSECTION THE MARKER SHALL BE PLACED 6" FROM THE NEAREST WHITE LANE LINE ON THE SIDE NEAREST THE FIRE HYDRANT.
4. ASSEMBLY SHALL BE FULLY RESTRAINED.
5. FIRE HYDRANT TO BE RELOCATED DURING CALTRANS PROJECT.

2 / - MODIFIED FIRE HYDRANT INSTALLATIONS SOUTH OF ARCHER
NTS

Login Name: jginnever
Plot Date: July 23, 2024 - 12:35 pm; Plot Style: ###
File Name: P:\Proj\16607-104-Gridley-SR99 Waterline\03-PLANS\MASTERS\SHEETS\16607-104_05 DETAILS.dwg
XREFS: BDR-16607-104_H_22x34 | 16607-104_XR-SITE | 03_1h140_BUT 99-PM 2.43-5.40_Survey Data | 16607-104_XR-UTIL

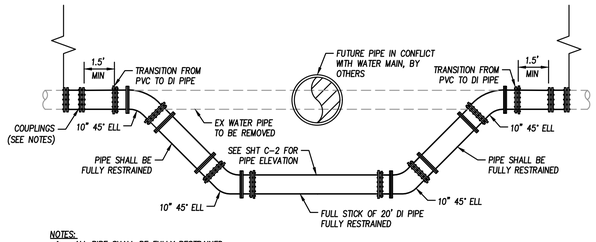

NOTES:
1. ALL PIPE SHALL BE FULLY RESTRAINED.
2. ALL PIPE AND FITTINGS TO CREATE THE DROP SHALL BE DUCTILE IRON, AND ALL BEND FITTINGS SHALL BE EITHER 45° OR 22-1/2° MECHANICAL JOINT TYPE WITH RUBBER GASKETED RESTRAINT GLANDS.
3. WHEN CONNECTING TO AN EXISTING MAIN, CONNECTIONS TO CAST IRON, DUCTILE IRON OR PVC PIPE SHALL BE MADE WITH MECHANICAL JOINT SOLID SLEEVES WITH RESTRAINT GLANDS. APPROVED RESTRAINED "WIDE-RANGE" COUPLINGS SHALL BE USED WHEN COUPLINGS AS SHOWN ARE NOT REQUIRED.

1 / - EX WATER MAIN LOWERING AT SHELDON
1" = 1'

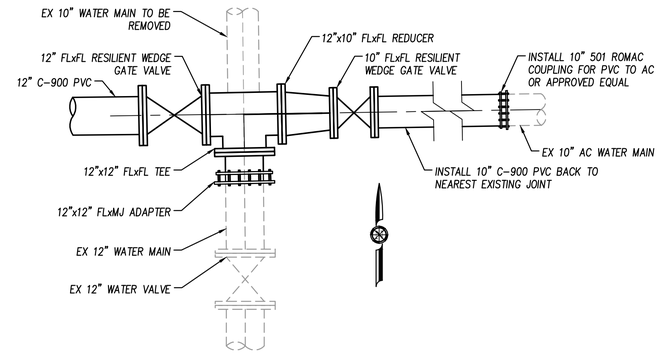

2 / - EX WATER MAIN TIE IN AT OBERMEYER
1" = 2'

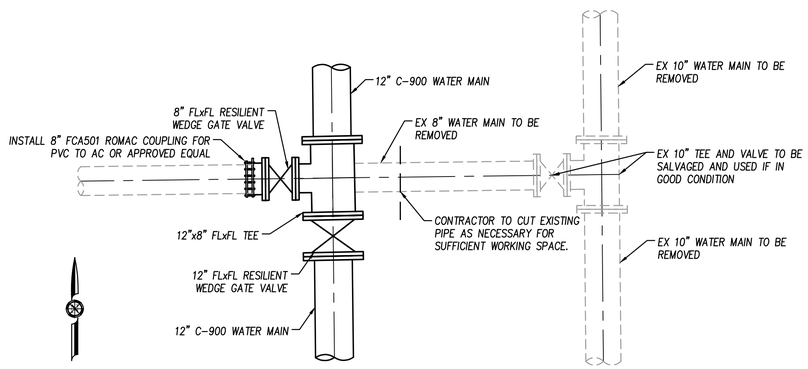

3 / - EX WATER MAIN TIE IN NEAR EVELYN
1" = 2'

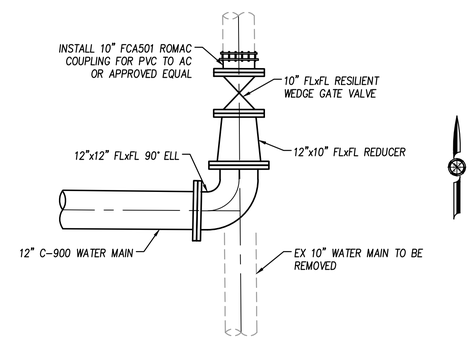

4 / - EX WATER MAIN TIE IN AT ARCHER
1" = 2'

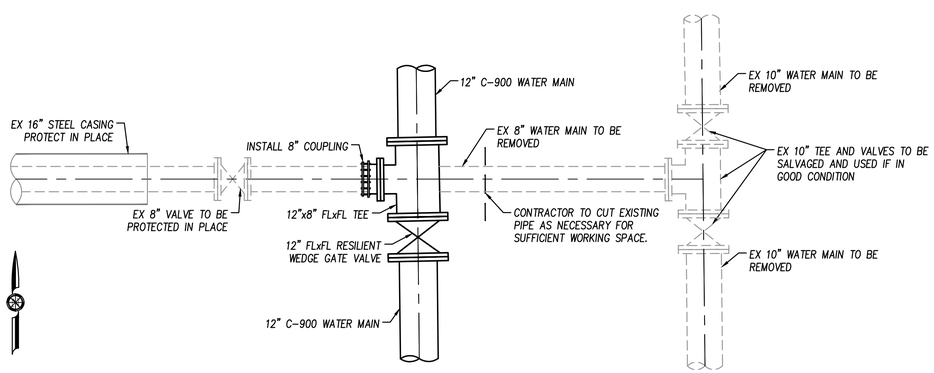

5 / - EX WATER MAIN TIE IN FOR ORCHARD VIEW APARTMENTS
1" = 2'

NO.	REVISIONS	BY	DATE
6			
5			
4			
3			
2			
1			

BENCH MARK ELEV : 96.08 DATUM : NAVD88
DESCRIPTION :
BASIS OF ELEVATIONS: CM 2.97, 96.08'
BASIS OF BEARINGS: CCS, ZONE 2, NAD 83 (2011) EPOCH 2017.5

DESIGN BY :	A. HOLLADAY
DRAWN BY :	J. GINNEVER
CHECKED BY :	D. HARDEN
SCALE :	VARIES
DATE :	07/23/2024
PROJ NO. :	16607-104

VERIFY SCALE
BAR IS ONE INCH ON ORIGINAL DRAWING.
0 1"
IF NOT ONE INCH ON THIS SHEET, ADJUST SCALES ACCORDINGLY.

REGISTERED PROFESSIONAL ENGINEER DAVID P. HARDEN No. C 34216 CIVIL STATE OF CALIFORNIA

BEN|EN TRUSTED ENGINEERING ADVISORS

Bennett Engineering Services
1082 Sunrise Avenue, Suite 100
Roseville, CA 95661
(916) 783-4100
www.ben-en.com

GRIDLEY CITY OF GRIDLEY

GRIDLEY SR-99 WATER RELOCATION PROJECT

CIVIL DETAILS

CALIFORNIA

Login Name: jgrenner
Plot Date: July 23, 2024 – 12:35 pm; Plot Style: ###
File Name: P:\Pro\16607-104-Gridley-SR99 Waterline\03-PLANS\MASTERS\SHEETS\16607-104_05 DETAILS.dwg
XREFS: BGM-16607-104_W_ZZ534 | 16607-104_XR-SITE | 03_in142_BUT 89-NW 2.43-5.40_Survey Data | 16607-104_XR-UTIL

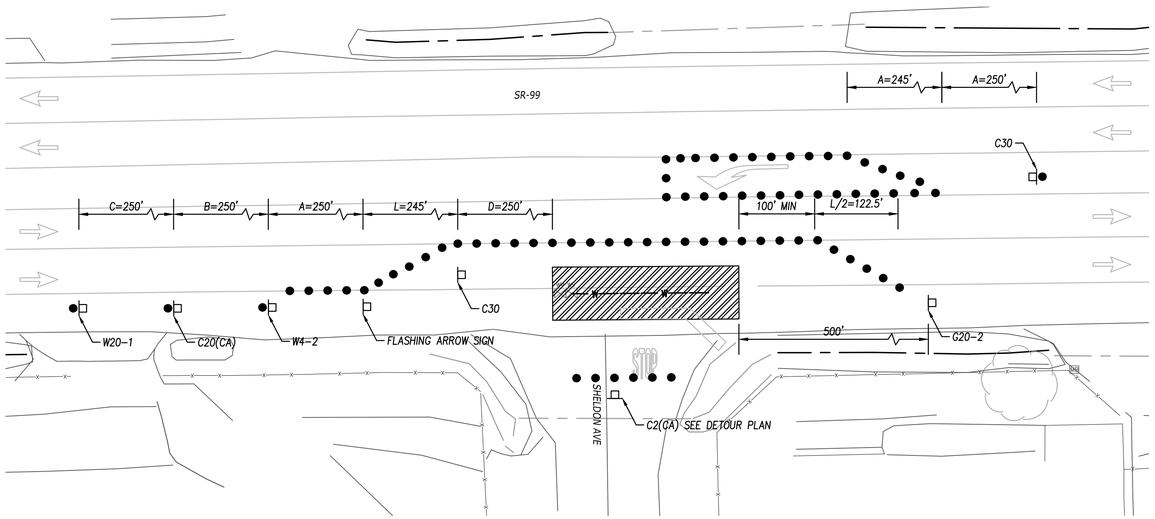

PHASE 2

TAPER LENGTH CRITERIA AND CHANNELIZING DEVICE SPACING

SPEED (S)	MINIMUM TAPER LENGTH * FOR WIDTH OF OFFSET 12 FEET (W)				MAXIMUM CHANNELIZING DEVICE SPACING		
					X	Y	Z **
	TANGENT 2L	MERGING L	SHIFTING L/2	SHOULDER L/3	TAPER	TANGENT	CONFLICT
mph	ft	ft	ft	ft	ft	ft	ft
20	160	80	40	27	20	40	10
25	250	125	63	42	25	50	12
30	360	180	90	60	30	60	15
35	490	245	123	82	35	70	17
40	640	320	160	107	40	80	20
45	1080	540	270	180	45	90	22
50	1200	600	300	200	50	100	25
55	1320	660	330	220	50	100	25
60	1440	720	360	240	50	100	25
65	1560	780	390	260	50	100	25
70	1680	840	420	280	50	100	25
75	1800	900	450	300	50	100	25

NOTES:
1. TRAFFIC CONTROL PLAN AND DETOUR PLAN PER CALTRANS STANDARDS
2. REFER TO CALIFORNIA MUTCD SIGN CHARTS
3. CONTRACTOR TO PROVIDE NOTIFICATION TO AFFECTED PROPERTIES TWO WEEKS IN ADVANCE.
4. CONTRACTOR TO PROCEED WITH CONSTRUCTION ACCORDING TO PHASING OF TRAFFIC CONTROL PLAN AND DETOUR PLAN.
5. RESIDENT AND BUSINESS ACCESS SHALL BE MAINTAINED THROUGHOUT THE PROJECT AREA AT ALL TIMES.

LEGEND

- TRAFFIC CONE
- TEMPORARY TRAFFIC CONTROL SIGN
- WORK AREA

LONGITUDINAL BUFFER SPACE AND FLAGGER STATION SPACING

SPEED *	Min D **	DOWNGRADE Min D ***		
		-3%	-6%	-9%
mph	ft	ft	ft	ft
20	115	116	120	126
25	155	158	165	173
30	200	205	215	227
35	250	257	271	287
40	305	315	333	354
45	360	378	400	427
50	425	446	474	507
55	495	520	553	593
60	570	598	638	686
65	645	682	728	785
70	730	771	825	891
75	820	866	927	1003

ADVANCE WARNING SIGN SPACING

ROAD TYPE	DISTANCE BETWEEN SIGNS *		
	A	B	C
	ft	ft	ft
URBAN - 25 mph OR LESS	100	100	100
URBAN - MORE THAN 25 mph TO 40 mph	250	250	250
URBAN - MORE THAN 40 mph	350	350	350
RURAL	500	500	500
EXPRESSWAY / FREEWAY	1000	1500	2640

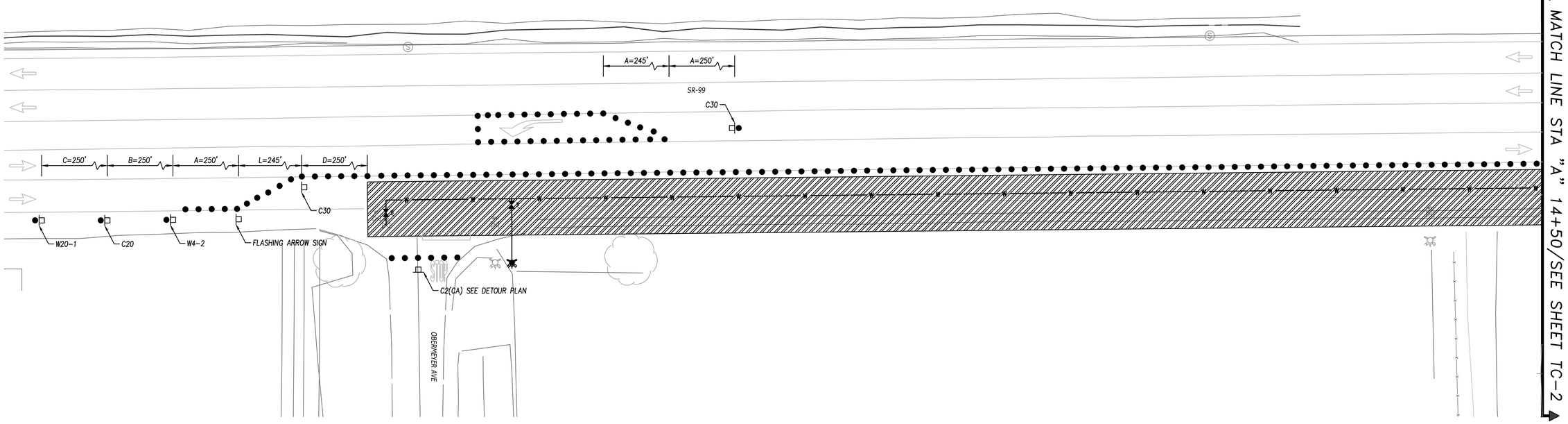

PHASE 1

H: 20 0 20 40
V: 5 0 5 10
SCALE IN FEET

NO.	REVISIONS	BY	DATE
1			
2			
3			
4			
5			
6			

BENCH MARK ELEV : 96.08 DATUM : NAVD88
DESCRIPTION :
BASIS OF ELEVATIONS: CM 2.97, 96.08'
BASIS OF BEARINGS: CCS, ZONE 2, NAD 83 (2011) EPOCH 2017.5

DESIGN BY :	A. HOLLADAY
DRAWN BY :	J. GINNEVER
CHECKED BY :	D. HARDEN
SCALE :	1"=20'
DATE :	07/23/2024
PROJ NO. :	16607-104

VERIFY SCALE
BAR IS ONE INCH ON ORIGINAL DRAWING.
0 1"
IF NOT ONE INCH ON THIS SHEET, ADJUST SCALES ACCORDINGLY.

REGISTERED PROFESSIONAL ENGINEER DAVID P. HARDEN C84216 CIVIL STATE OF CALIFORNIA

BEN|EN TRUSTED ENGINEERING ADVISORS

Bennett Engineering Services
1082 Sunrise Avenue, Suite 100
Roseville, CA 95661
(916) 783-4100
www.ben-en.com

GRIDLEY CALIFORNIA
CITY OF GRIDLEY

GRIDLEY SR-99 WATER RELOCATION PROJECT

TRAFFIC CONTROL PLAN

CALIFORNIA

TC-1

10 OF 12

Login Name: jginnever
Plot Date: July 23, 2024 - 12:36 pm, Plot Style: ####
File Name: P:\Proj\16607-104-Gridley-SR99 Waterline\03-PLANS\MASTERS\SHEETS\16607-104_OB TC-1 TRAFFIC CONTROL PLAN.dwg
XREFS: BDR-16607-104_A_22x34 | 03_ThinAD_BUT 99-PM 2.43-5.40_Survey Data | 16607-104_XR-SITE | 16607-104_XR-REDM-CALTRANS | 16607-104_XR-TOPO | 16607-104_XR-ELECTRICAL-CALTRANS | 16607-104_XR-UTIL

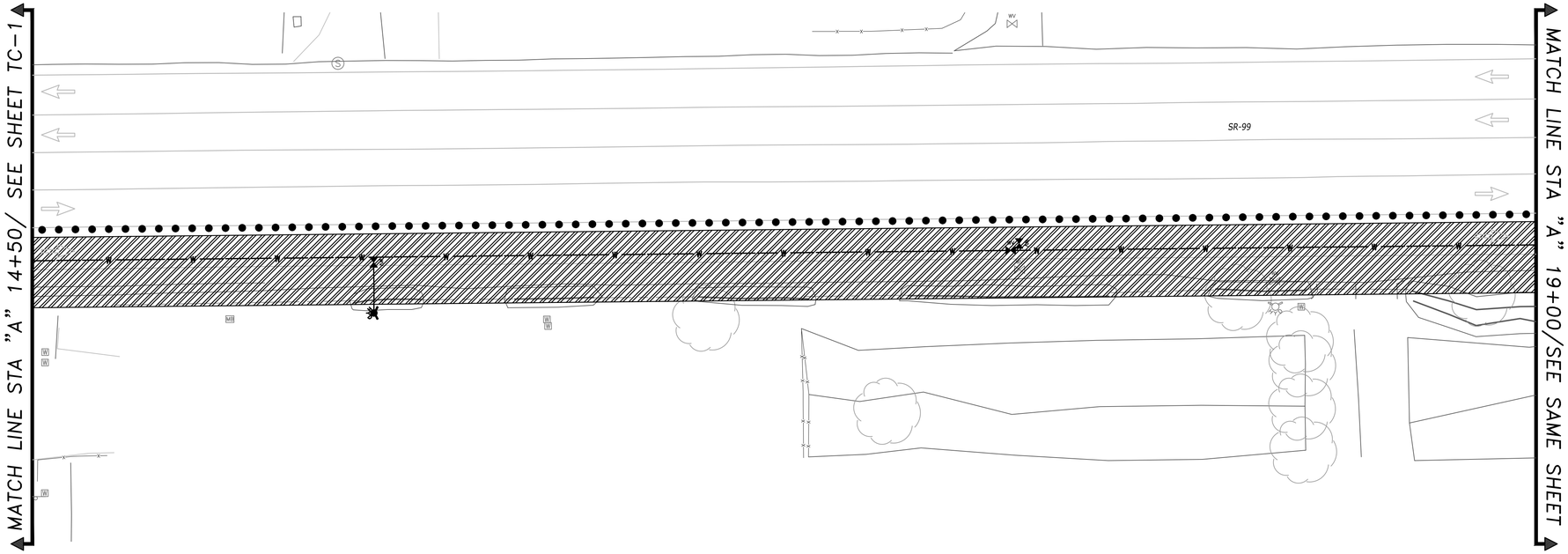

PHASE 1

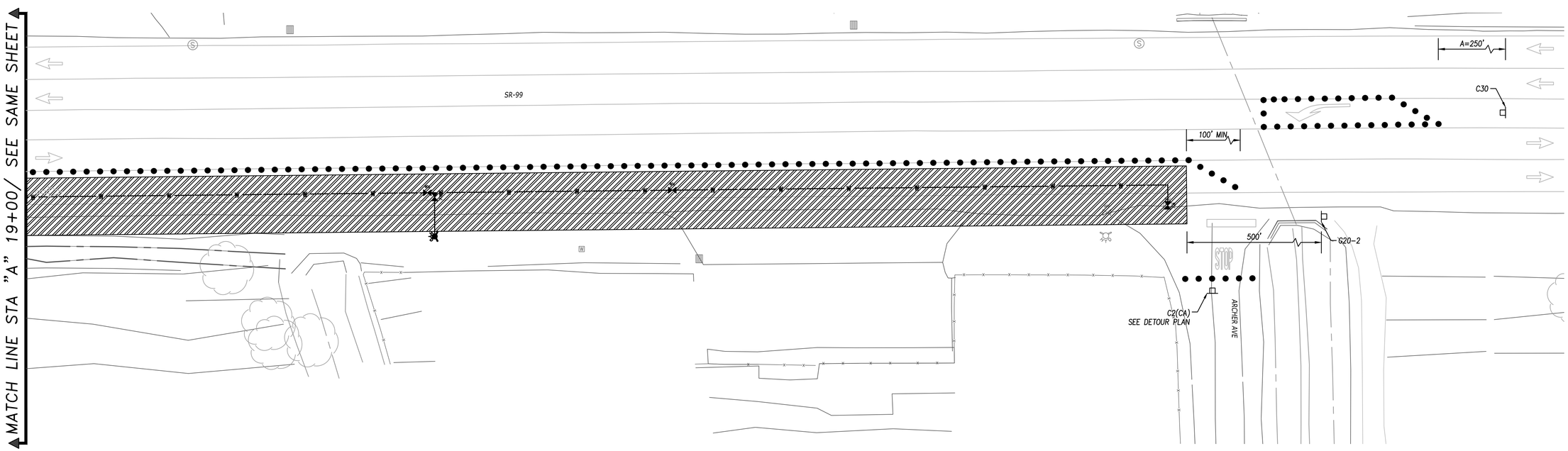

PHASE 1

NOTES:
1. TRAFFIC CONTROL PLAN AND DETOUR PLAN PER CALTRANS STANDARDS
2. REFER TO CALIFORNIA MUTCD SIGN CHARTS
3. CONTRACTOR TO PROVIDE NOTIFICATION TO AFFECTED PROPERTIES TWO WEEKS IN ADVANCE.
4. CONTRACTOR TO PROCEED WITH CONSTRUCTION ACCORDING TO PHASING OF TRAFFIC CONTROL PLAN AND DETOUR PLAN.
5. RESIDENT AND BUSINESS ACCESS SHALL BE MAINTAINED THROUGHOUT THE PROJECT AREA AT ALL TIMES.

LEGEND

- TRAFFIC CONE
- TEMPORARY TRAFFIC CONTROL SIGN
- WORK AREA

H: 20 0 20 40
V: 5 0 5 10
SCALE IN FEET

NO.	REVISIONS	BY	DATE
1			
2			
3			
4			
5			
6			

BENCH MARK ELEV : 96.08 DATUM : NAVD88
DESCRIPTION :
BASIS OF ELEVATIONS: CM 2.97, 96.08'
BASIS OF BEARINGS: CCS, ZONE 2, NAD 83
(2011) EPOCH 2017.5

DESIGN BY :	A. HOLLADAY
DRAWN BY :	J. GINNEVER
CHECKED BY :	D. HARDEN
SCALE :	1"=20'
DATE :	07/23/2024
PROJ NO. :	16607-104

VERIFY SCALE
BAR IS ONE INCH ON ORIGINAL DRAWING.
0 1"
IF NOT ONE INCH ON THIS SHEET, ADJUST SCALES ACCORDINGLY.

REGISTERED PROFESSIONAL ENGINEER DAVID P. HARDEN C 56216 CIVIL STATE OF CALIFORNIA

BEN|EN
TRUSTED ENGINEERING ADVISORS

Bennett Engineering Services
1082 Sunrise Avenue, Suite 100
Roseville, CA 95661
(916) 783-4100
www.ben-en.com

GRIDLEY
CITY OF GRIDLEY

GRIDLEY SR-99 WATER RELOCATION PROJECT

TRAFFIC CONTROL PLAN

CALIFORNIA

TC-2
11 OF 12

Login Name: jginnever
Plot Date: Jul 23, 2024 – 12:38 pm; Plot Style: ####
Plot Scale: 1:1; Layout: AA22
File Name: P:\Proj\16607-104-Gridley-SR99 Waterline\03-PLANS\MASTERS\SHEETS\16607-104_OR TC-1 TRFTIC CONTROL PLAN.dwg
XREFS: BEN-16607-104_H_2ZA24 | 03_TH40_BUT 99-PM 2.43-5.40_Survey Data | 16607-104_XR-SITE | 16607-104_XR-BZOM-CALTRANS | 16607-104_XR-TOPO | 16607-104_XR-ELECTRICAL-CALTRANS | 16607-104_XR-DRAINAGE-CALTRANS | 16607-104_XR-UTIL

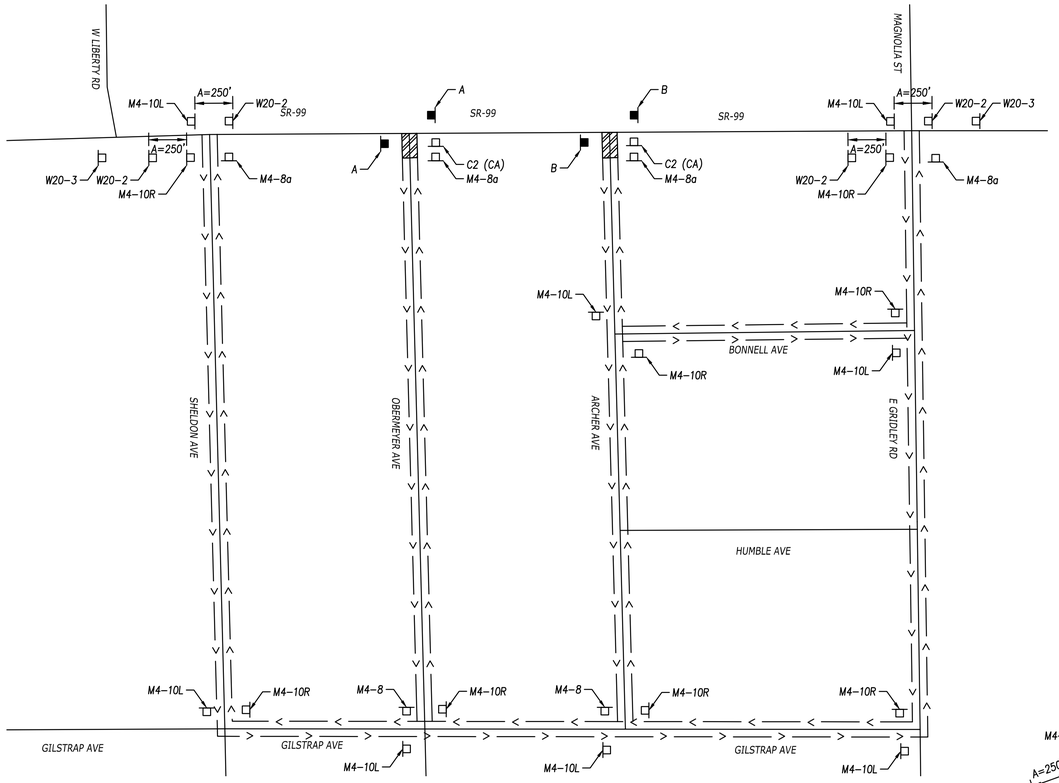

PHASE 1

DETOUR TRAFFIC SIGN SCHEDULE PHASE 1			
SIGN NUMBER	SIZE	DESCRIPTION	NUMBER OF SIGNS
M4-10	48x48	DETOUR (ARROW)	16
M4-8	30x24	DETOUR	2
M4-8a	24x18	DETOUR END	4
W20-2	36x36	DETOUR AHEAD	4
W20-3	36x36	ROAD CLOSED AHEAD	2
C2 (CA)	48x30	ROAD CLOSED	2

NOTES:
1. TRAFFIC CONTROL PLAN AND DETOUR PLAN PER CALTRANS STANDARDS
2. REFER TO CALIFORNIA MUTCD SIGN CHARTS
3. CONTRACTOR TO PROVIDE NOTIFICATION TO AFFECTED PROPERTIES TWO WEEKS IN ADVANCE.
4. CONTRACTOR TO PROCEED WITH CONSTRUCTION ACCORDING TO PHASING OF TRAFFIC CONTROL PLAN AND DETOUR PLAN.
5. RESIDENT AND BUSINESS ACCESS SHALL BE MAINTAINED THROUGHOUT THE PROJECT AREA AT ALL TIMES.

PORTABLE CHANGEABLE MESSAGE SIGN		
SIGN NUMBER	FIRST FLASH	SECOND FLASH
A	OBERMYER AVE CLOSED	USE GILSTRAP AVE
B	ARCHER AVE CLOSED	USE GILSTRAP AVE
C	SHELDON RD CLOSED	USE GILSTRAP AVE

LEGEND
- TRAFFIC CONE
- TEMPORARY TRAFFIC CONTROL SIGN
- PORTABLE CHANGEABLE MESSAGE SIGN
- WORK AREA
- DIRECTION OF TRAVEL

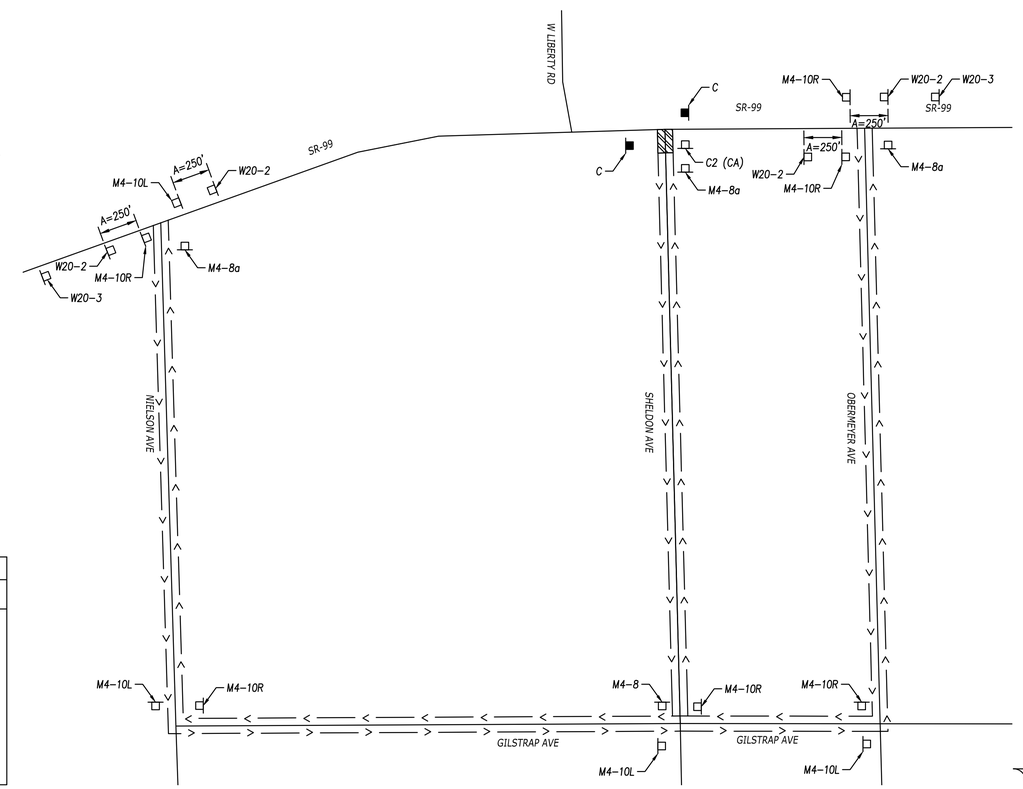

PHASE 2

DETOUR TRAFFIC SIGN SCHEDULE PHASE 2			
SIGN NUMBER	SIZE	DESCRIPTION	NUMBER OF SIGNS
M4-10	48x48	DETOUR (ARROW)	10
M4-8	30x24	DETOUR	2
M4-8a	24x18	DETOUR END	3
W20-2	36x36	DETOUR AHEAD	4
W20-3	36x36	ROAD CLOSED AHEAD	2
C2 (CA)	48x30	ROAD CLOSED	1

500 0 500 1,000
SCALE IN FEET

NO.	REVISIONS	BY	DATE
6			
5			
4			
3			
2			
1			

BENCH MARK ELEV : 96.08 DATUM : NAVD88
DESCRIPTION :
BASIS OF ELEVATIONS: CM 2.97, 96.08'
BASIS OF BEARINGS: CCS, ZONE 2, NAD 83 (2011) EPOCH 2017.5

DESIGN BY :	A. HOLLADAY
DRAWN BY :	J. GINNEVER
CHECKED BY :	D. HARDEN
SCALE :	1"=500'
DATE :	07/23/2024
PROJ NO. :	16607-104

VERIFY SCALE
BAR IS ONE INCH ON ORIGINAL DRAWING.
0 1"
IF NOT ONE INCH ON THIS SHEET, ADJUST SCALES ACCORDINGLY.

REGISTERED PROFESSIONAL ENGINEER DAVID P. HARDEN C 64216 CIVIL STATE OF CALIFORNIA

BEN|EN TRUSTED ENGINEERING ADVISORS

Bennett Engineering Services
1082 Sunrise Avenue, Suite 100
Roseville, CA 95661
(916) 783-4100
www.ben-en.com

GRIDLEY CITY OF GRIDLEY

GRIDLEY SR-99 WATER RELOCATION PROJECT

DETOUR PLAN

CALIFORNIA

DP-1

12 OF 12

Login Name: jgrinnever
Plot Date: Wed, Jul 24, 2024 - 12:36 pm; Plot Style: ###
File Name: P:\Proj\16607-104-Gridley-SR99 Waterline\03-PLANS\MASTERS\SHEETS\16607-104_06 TC-1 TRFFIC CONTROL PLAN.dwg
XREFS: BGM-16607-104_H_ZZ024 | 03_INI40_BUT 99-PM 2.43-5.40_Survey Data | 16607-104_XR-SITE | 16607-104_XR-BGM-CALTRANS | 16607-104_XR-TOPO | 16607-104_XR-ELECTRICAL-CALTRANS | 16607-104_XR-UTIL